S-Series

Low Flow Meter Instructions

SPX

SPT

Seametrics
Precision Flow Measurement
An ONICON Brand

PROUDLY MADE IN THE USA

Certified Company ISO 9001

General Information

General Information ..... Page 3
Features ..... Page 3
Specifications ..... Page 4
Dimensions ..... Page 4
Flow Range ..... Page 4
Pressure Drop Curve ..... Page 5

Installation & Connections

Piping Requirements ..... Page 5
K-Factor ..... Page 5
Connections to Non-Seametrics Control Devices ..... Page 5

Repair

Rotor Replacement ..... Page 6
Sensor Replacement ..... Page 6
SPX/SPT Parts List ..... Page 7

Troubleshooting

Problem ..... Back
Probably Causes ..... Back
Things to Try ..... Back

These versatile impeller flowmeters are availalble in 3/8", 1/2", 3/4", and 1" nominal pipe sizes with female NPT threads. They employ jewel bearings to allow for very low minimum flow rates and superior life.

The **SPX**, with a body of polypropylene, is an economical choice for metering water or low corrosion fluids. The lens cover is available in a choice of materials: acrylic for visual flow indication of low-corrosion fluids; polypropylene when more corrosion resistance is needed. The standard rotor assembly is Kynar® with tungsten carbide shaft. The O-ring is EPDM.

The **SPT** offers greater chemical resistance with a Teflon® body and cover, Teflon®-coated Viton® O-ring, and standard Kynar®/ceramic rotor assembly.

The pulse output of these meters is compatible with many different types of controls, including a full range of Seametrics rate displays and controls. The Seametrics FT430 and FT440 provide flow rate and total flow indication. The FT440 also includes 4-20 mA output capability. The FT450 is a battery-operated rate & total display. For metering pump pacing or interfacing with low speed counters, the PD10 pulse divider is recommended. The AO55 may be used for blind 4-20 mA transmission.

Features

18' (5.5m) Sensor Cable
Low power- Dark blue (powered units)
Micropower- Grey (battery units)

Thread-in Sensor, Field Replaceable,
6–24 Vdc Pulse

Standard Acrylic Top with Clear
Removable Lens Assembly
(optional polypropylene top without clear lens)
(Standard black EPDM O-ring shown)

Hex Screws

Female NPT Ports

Polyproylene Body

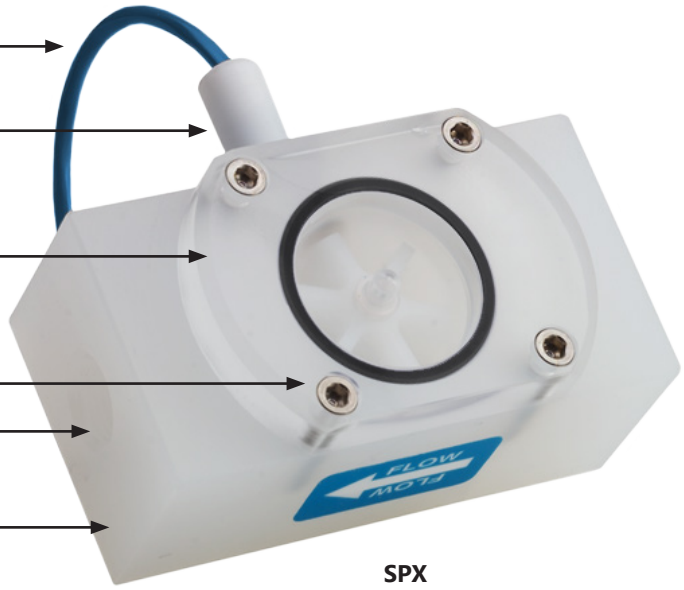

SPX

Internal
- Jewel Bearings—Ruby Ring and Ball
- Kynar®/Tungsten Carbide Rotor Assembly *(Kynar®/Ceramic or Kynar®/Silicon Carbide optional)*
- EPDM O-Ring *(Viton® or Teflon®-coated Viton® optional)*

18' (5.5 m) Sensor Cable

Thread-in Sensor, Field Replaceable,
6–24 Vdc Pulse

Teflon® Body and Top

Screws with Hex Nuts

Female NPT Ports

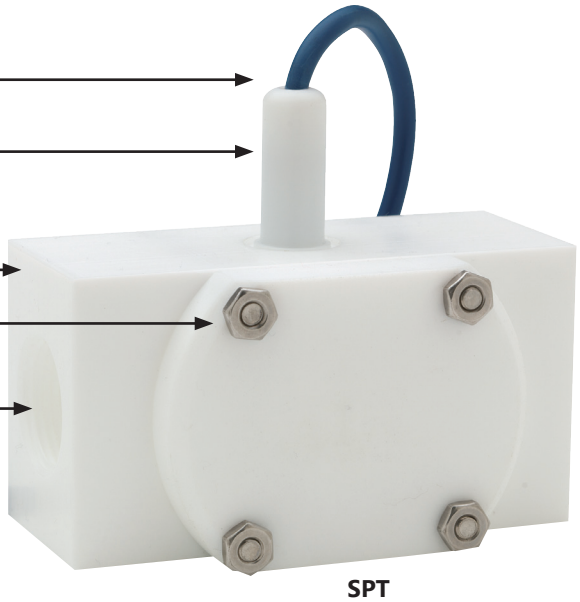

SPT

Internal
- Jewel Bearings—Ruby Ring and Ball
- Kynar®/Ceramic Rotor Assembly *(Kynar®/Silicon Carbide optional)*
- Teflon®-coated Viton® O-Ring *(Viton® or EPDM optional)*

Specifications*

		SPX	SPT
Connection Ports		3/8″, 1/2″, 3/4″, 1″ —Female NPT thread	3/8″, 1/2″, 3/4″, 1″ —Female NPT thread
Sensor Cable		18 ft (6 m) standard—maximum cable run 2000 ft (607 m)	18 ft (6 m) standard—maximum cable run 2000 ft (607 m)
Materials	**Body**	Polypropylene	TFE Teflon®
	Rotor	PVDF (Kynar®)—2 magnet *(6 magnet high resolution optional)*	PVDF (Kynar®)—2 magnet *(6 magnet high resolution optional)*
	Shaft	Nickel tungsten carbide *(ceramic or silicon carbide optional)*	Zirconia ceramic *(silicon carbide optional)*
	O-Ring	EDPM *(Viton® or Teflon®-coated Viton® optional)*	Teflon®-coated Viton® *(Viton® or EDPM optional)*
	Bearings	Ruby ring and ball	Ruby ring and ball
	Cover	Acrylic with clear lens *(polypropylene without clear lens optional)*	TFE Teflon®
Maximum Temperature		160˚ F (70˚ C)	180˚ F (82˚ C)
Maximum Pressure		150 psi (10 bar)	150 psi (10 bar)
Accuracy		±1% of full scale	±1% of full scale
Power	**Standard**	6–36 Vdc, 2 mA min.	6–36 Vdc, 2 mA min.
	Micropower	3.1–16 Vdc (for use with FT450 and DL76 only)	3.1–16 Vdc (for use with FT450 and DL76 only)
Outputs		Current sinking pulse, 6–24 Vdc	Current sinking pulse, 6–24 Vdc

** Specifications subject to change. Please consult our website for current data (seametrics.com)*
Kynar is a registered trademark of Arkema, Inc., Teflon and Viton are registered trademarks for DuPont Corporation

Dimensions

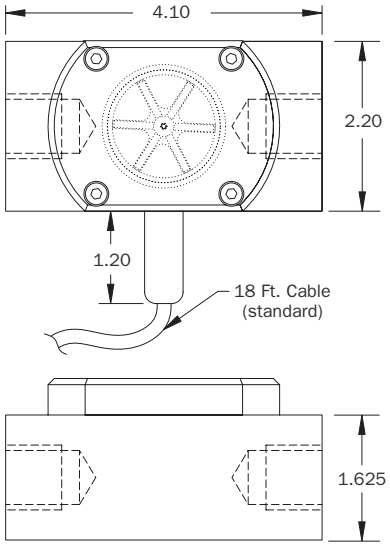

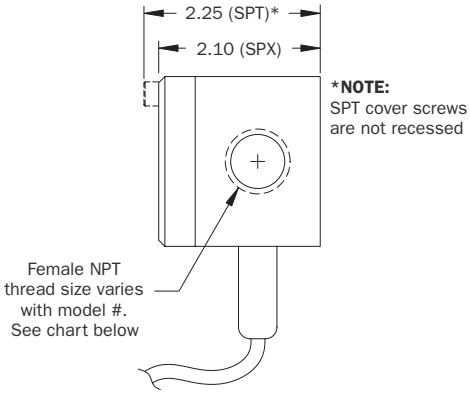

Model #	NPT Thread Size
-038	3/8″
-050	1/2″
-075	3/4″
-100	1″

Flow Range

Model #	K-Factor* (pulses/gal)		Gal/Min	Liter/Min
	SPT	SPX		
-038	1394	1417	0.07–5	0.27–18.9
-050	634	658	0.1–10	0.38–37.9
-075	476	468	0.2–20	0.75–75
-100	250	254	0.5–40	1.9–150

**Nominal K-factors (based on averages) for standard 2-magnet SPT and SPX. High resolution (6-magnet) K-factors are approximately tripled.*

Pressure Drop Curves

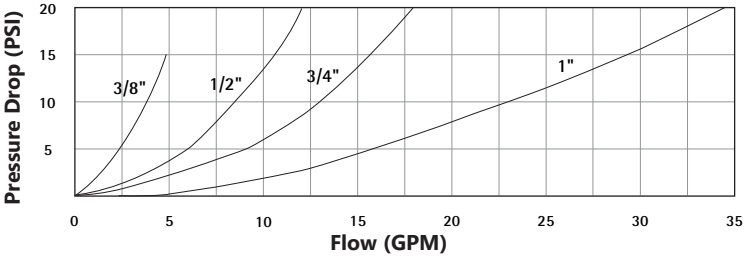

INSTALLATION

Piping Requirements

Standard fittings are female NPT. If the piping connected to the meter is metallic, care should be taken not to overtighten. Straight pipe of at least five diameters upstream of the meter is recommended. Vertical or horizontal installations are acceptable.

WARNING:
This meter has low-friction bearings. Do not at any time test operation of the meter with compressed air. Doing so will subject it to rotational speeds many times those for which it was designed, and will certainly damage the rotor, shaft, and/or bearings.

K-Factor

The meter is factory calibrated. The K-factor is found on the label on the meter body and must be input into the control/display for accurate reading.

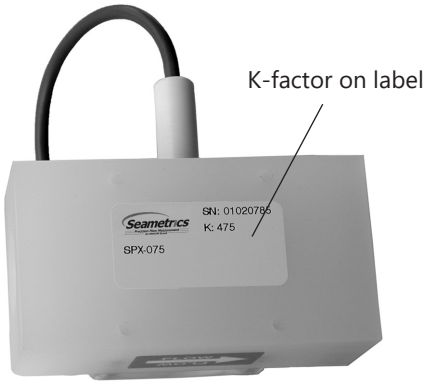

CONNECTIONS

Connecting to Non-Seametrics Control Devices

It is often desirable to connect an SPX/SPT flow sensor to a PLC or industrial computer board, and the sensors are well suited for this. Typically it can be connected directly, or with a single resistor added. The pickup sensors are current sinking (NPN) GMR devices that require 6–36 Volts DC and 2 mA current. They can connect directly to a PLC or computer board if:

1. The sensor power supply on the PLC is 6–36 Vdc (24 Vdc is typical).
2. The sensor power supply can provide at least 2 mA (100 mA is typical).
3. The sensor input on the PLC can accept a current sinking device.
4. The PLC frequency response > flow meter output frequency.

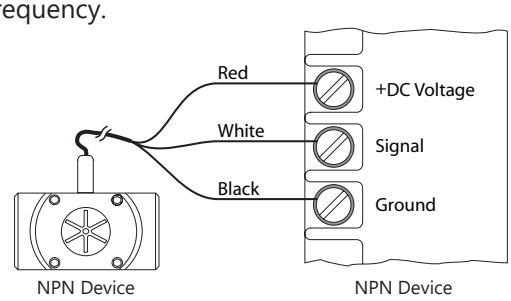

Input designed for current sinking devices (NPN)

If the PLC input only accepts current sourcing devices, a pull-up resistor must be added. Typically, on a 24 Vdc input a 2.2 K Ohm resistor will be effective.

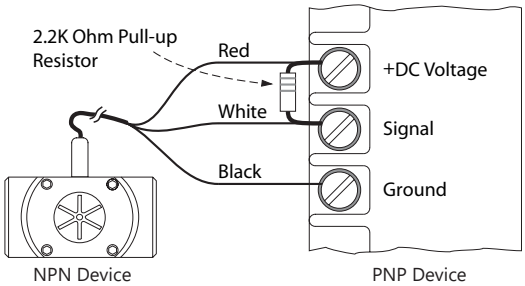

Input designed for current sourcing (PNP) devices

Since the three-wire pickup sensors are solid state, they do not exhibit switch bounce and can be used at relatively high frequencies.

If the PLC is equipped with a 4-20 mA analog input module, it is necessary to order the S- Series flow sensor with some form of 4-20 mA transmitter. Two options are the AO55 blind transmitter and the FT440 indicating transmitter. Follow the connection diagrams for these products to connect to the analog input.

Rotor Replacement

There is only one moving part to this meter. The bearings are made of ruby, which rarely wears out or needs replacement unless they have been physically damaged by severe shock. The shaft is integrally molded into the rotor, and shaft and rotor are replaced as one part. (You may wish to replace the bearings, using the bearing removal tool, while the meter is disassembled for rotor replacement). To replace the rotor, disconnect the meter and remove the four screws that hold the cover in place. Lift the cover and remove the rotor (see parts diagram below).

When putting in the new rotor, be sure that the ends of the shaft are in both bearings before tightening the cover. The rotor can be easily dropped into the bottom bearing. Starting the shaft into the upper bearing requires a bit of care. It is easier if the rotor is spinning, which can be done by lightly blowing into a port. When the upper bearing plate drops into place, hold it down and check for free spinning (by blowing lightly) before replacing the cover. Check that the O-ring is in its seat on the bearing plate before replacing the cover. Replace the cover, insert the four cap screws and tighten.

Sensor Replacement

The sensor ordinarily does not need replacement unless it is electrically damaged. If replacement is necessary, unscrew the sensor by hand. Screw the replacement sensor in and tighten by hand.

Reconnect the sensor according to the diagram below.

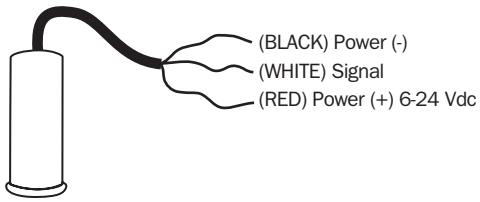

SPX/SPT Parts List

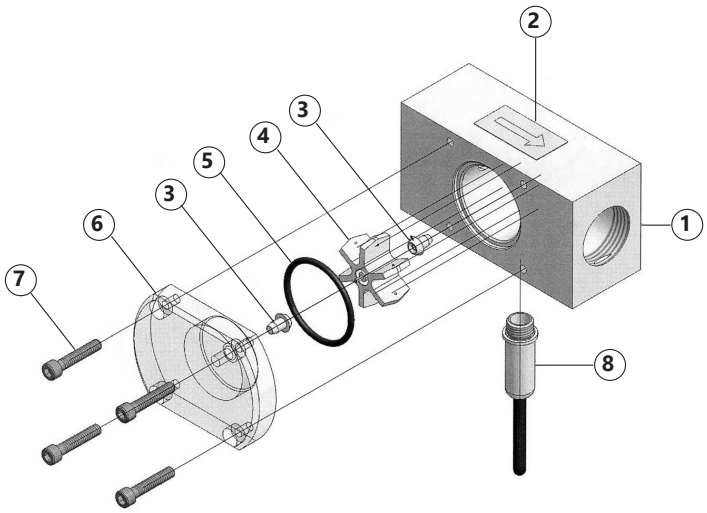

			SPX	SPT
1	**Body**	**-038**	100221	100269
		-050	100222	100268
		-075	100223	100267
		-100	100224	100266
2	**Flow direction Label**		100256	100256
3	**Bearing Assembly** *(includes 2)*		103313	103313
	Bearing Removal Tool *(not shown)*		100372	100372
4	**Rotor Repair Kit**			
		Kynar®/Ceramic *(2 magnet)*	103930	103930
		Kynar®/Carbide *(2 magnet)*	103931	n/a
		Kynar®/Silicon Carbide *(2 magnet)*	103933	103933
		Kynar®/Ceramic *(6 magnet, high res)*	100453	100453
		Kynar®/Carbide *(6 magnet, high res)*	103932	n/a
		Kynar®/Silicon Carbide *(6 magnet, high res)*	103934	103934
5	**O- Ring**	**EPDM**	100264 (standard)	100264 (optional)
		Viton®	100219 (optional)	100219 (optional)
		Teflon®-coated Viton®	100973 (optional)	100973 (standard)
6	**Cover** *(after 5/2005)*			
		Polypro	100849	Not available
		Acrylic	100848	Not available
		Teflon®	Not available	100847
7	**Cover Screws** *(4 required)*			
		Hexscrew	100310	Not applicable
		Screw *(requires hex nut 100025)*	Not applicable	100022
		Hex nut *(requires screw 100022)*	Not applicable	100025
8	**Sensor**	**Standard**	100419	100419
		Micropower	100508	100508

Kynar is a registered trademark of Arkema, Inc., Teflon and Viton are registered trademarks for DuPont Corporation

Problem	Probable Cause	Things to Try...
No signal after installation	Insufficient flow	Consult Flow Rate Chart Reduce pipe size or use different sensor
	Bad connections to control electronics	Check connections at control: Red (+), Black (-), White (signal)
	Incompatible control	Use 6–36 Vdc power supply - for low power Use 3.1–16 Vdc power supply - for micropowered Add pull up resistor, if using current-sourcing device
	Damaged or missing rotor	Remove flow sensor from fitting and check for free spinning; replace rotor
	Failed magnetic sensor	Replace magnetic sensor
Inaccurate metering	Not enough straight pipe between meter and severe flow disturbance	Move meter away from flow disturbance or field calibrate
	Wrong K-Factory entered	Check fitting for K-Factor, check indicator to see if it is entered properly ("Set K" on FT430, FT440, FT450, or FT520)
	Magnetic sensor failing to pick up each blade	Remove flow sensor from pipe. If indicator is FT430, FT440, FT450, or FT520, set K to 1.00, turn rotor slowly by hand, indicator should cound each blade; replace sensor
	Wrong time units on flow indicator	If using FT430, FT440, or FT520, check left side of display (sec, min, hr, day); change to desired unit