PT35

Dual Pulse Timer Instructions

Seametrics
Precision Flow Measurement
An ONICON Brand

PROUDLY MADE IN THE USA

Certified Company ISO 9001

General Information

General Information ..... Page 3
Features ..... Page 3
Specifications ..... Page 3

Installation and Connections

Mounting ..... Page 4
Connecting the Meter ..... Page 4
Connector Field Installation ..... Page 4
PT35 Connections Diagrams ..... Page 4
Connecting the Load ..... Page 4
Connecting Power ..... Page 4
Setting ..... Page 4

Operation

Possible Overlap Conditions ..... Page 5
Accumulator Function ..... Page 5
How to Determine Accumulator Setting(s) ..... Page 5
How to Determine TIMER (Power On Time) Setting(s) ..... Page 5

Troubleshooting

Problem ..... Page 6
Probable Causes ..... Page 6
Things to Try ..... Page 6

Warranty

Seametrics Limited Warranty ..... Page 7

The **PT35** digital counter-timer is designed to be used with Seametrics (or similar) meters and flow sensors that produce a pulse signal. It is typically used in water treatment and chemical dosing applications, most often in cooling towers and boilers. The PT35 serves as either a single or a dual timer, depending on whether one or both of its independent accumulators and timed outputs are used.

In single timer applications, one accumulator counts pulses coming from the meter. When a pre-set number of pulses has been reached, output power turns on for a set time, and then the cycle repeats.

In dual timer applications (typically, one chemical feed and one water bleed), both accumulators and timers are set to operate independently with input from a single meter. A sequential function can be selected to lock one timer out while the other is operating. This prevents feed and bleed from occurring simultaneously.

The PT35 can be used with dry contact meters (e.g. Seametrics MJR meters), contacting-head meters with solid-state pickups (e.g. Seametrics MJE meters), or insertion flow sensors (e.g. Seametrics IP, TX, and EX Series).

Features

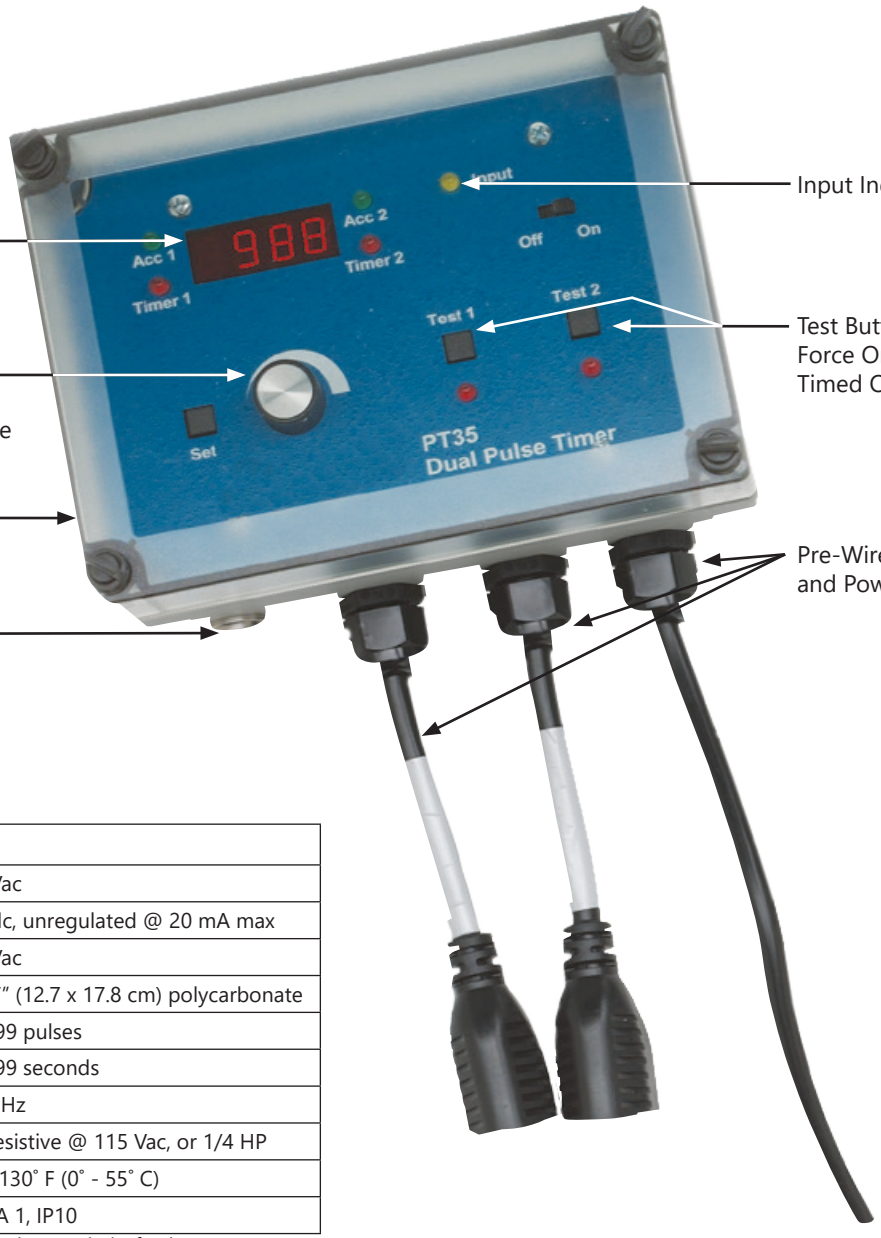

Specifications*	
Power	115 Vac
Sensor Power	12 Vdc, unregulated @ 20 mA max
Output (2)	115 Vac
Enclosure	5" x 7" (12.7 x 17.8 cm) polycarbonate
Accumulator Range	1–9999 pulses
Timer Range	1–9999 seconds
Maximum Input Frequency	1000 Hz
Relay Contact Rating	5 A resistive @ 115 Vac, or 1/4 HP
Temperature	32˚ - 130˚ F (0˚ - 55˚ C)
Environmental	NEMA 1, IP10

** Specifications subject to change. Please consult our web site for the most current data. (seametrics.com)*

Mounting

Use a secure surface that will accept screws. Remove the front clear cover by use of the thumb screws to access the mounting holes at the four corners. Using the box as a template, mark the centers of the holes with a pencil and drill. Insert screws through the four corner holes and tighten.

Connecting the Meter

Because the PT35 comes standard with a built-in meter connector, the simplest method of connecting your Seametrics meter to the PT35 is to order a mating "Seametrics connector" pre-installed on your meter or flow sensor. If your meter does not have a Seametrics connector, there are three alternatives: 1) Any wire ends can be connected to the PT35 terminal block (see Connections diagram at right). 2) A cable-with-connector can be factory-ordered and field-wired to your meter. 3) A connector can be factory-ordered and field-installed on your meter output cable (see Connector Field Installation diagram below).

Connector Field Installation

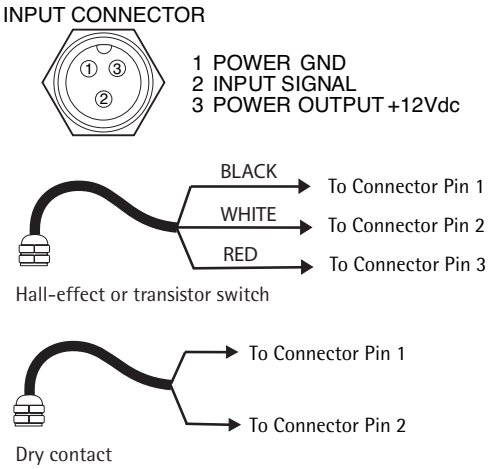

PT35 Connections Diagram

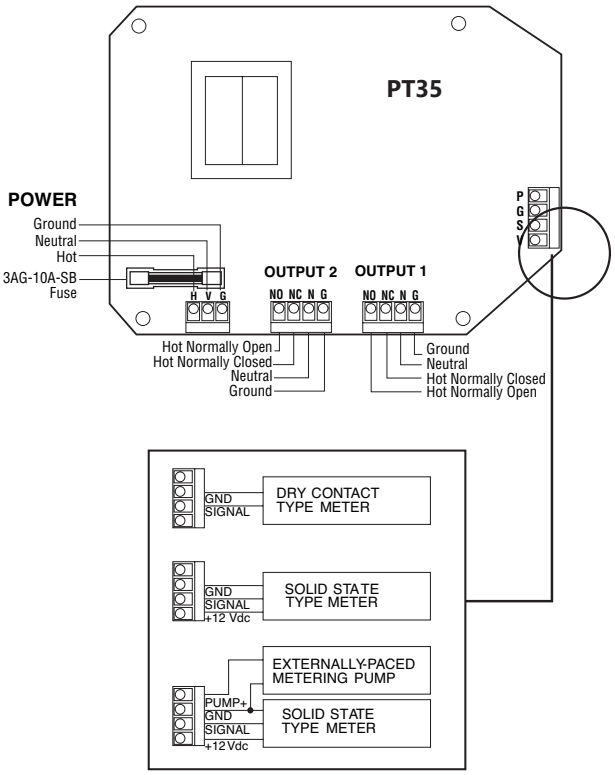

Input Connections

Connecting the Load

Two output cords are provided for connection of 115 Vac loads. The unit can be hard-wired if necessary, using the terminals inside.

Connecting Power

A power cord is provided. Connect by plugging in to any standard grounded outlet. (See Connections Diagram above for conduit connection.)

Setting

Using the thumb screws, remove the front cover.

1. Press the SET button. The green ACC (accumulator) light at the upper left corner of the display will begin blinking, indicating that the accumulator is ready to be set.
2. Turn the knob clockwise to increase or counter-clockwise to decrease until the desired number of pulses is reached.
3. Press SET again. The red TIMER indicator will light.
4. Set the desired time in seconds for output power to turn on.
5. Repeat the process to set Accumulator 2 and Timer 2 as needed.
6. Press SET again to display "SEq" (sequential).
7. Turn the knob in either direction to switch from "SEq" to "nSEq" (non-sequential). Sequential operation prevents the Timer 2 output from operating while Timer 1 is on, so that chemical feed does not occur during bleed. Non-sequential operation allows either timer to operate immediately when its count is reached.
8. Press SET again to return to normal operation.

Test for Timed Output. To test the timed output(s), press the "TEST 1" or "TEST 2" button. The read output indicator should light and remain on for the pre-set number of seconds.

After setting (when the unit has returned to normal operation, indicated by no blinking indicators), any display can be selected at any time by turning the knob. Turning the knob clockwise causes clockwise rotation among the indicator lights. Stop turning the knob after arriving at the desired display. This is the display that will remain until another display is selected.

Possible Overlap Conditions

If the power on time is longer than the time between on cycles, the on time won't elapse before the next on cycle is supposed to start. If this happens, the power output will remain on, and "OUF" (Overlap, Under wait time, Failure) will appear on the screen, to alert the user that a problem has occurred. This situation can be avoided by following the equation above in "How To Determine TIMER (Power On Time) Setting(s)". Also note that if in sequential mode, the sum of the on time, must be less than the minimum seconds between cycles. Otherwise, one relay will hold up the other and an overlap condition will occur.

Accumulator Function

The accumulator adds received pulses once every second, and when the accumulator number is reached or exceded, the power will turn on. However, any pulses above the accumulator number will not roll over to the next cycle, so if the accumulator is set to 20, with 19 pulses already having been received, and 2 more are received in the next second, the accumulator will read 0 once the power is turned on, and not 1.

How to Determine Accumulator Setting(s)

If the meter pulses once every gallon, set the accumulator for the number of gallons desired between timer cycles. For meters with multiple pulses per gallon, multiply the desired number of gallons by the pulses per gallon. For meters with multiple gallons between pulses, divide the desired gallons by the gallons per pulse.

Example:

The goal is one timer output every 60 gallons.
The meter has a 5 gallons-per-pulse (G/P) output.

$$\frac{60 \text{ gallons}}{5 \text{ gallons/pulse}} = 12 \text{ pulses (accumulator setting)}$$

How To Determine TIMER (Power On Time) Setting(s)

The TIMER time is set to release the desired amount of chemical to be fed or water to be bled, and is specific to the pump, valve, etc. being used. When determining the power on time, check that it isn't more than the expected time between cycles, to avoid feeding and bleeding out of order or possible overlap conditions, by calculating:

$$\frac{\text{Cycle Size (Gallons)}}{\text{Max. Flow Rate (GMP)}} \times \frac{60 \text{ sec}}{\text{Min.}} = \text{minimum seconds between cycles}$$

If this result is greater than the determined power on time, enter the determined power on time into the TIMER setting.

Problem	Probable Causes	Things to try...
On/Off switch is fully in “on” position, but display is not lighted	Unit does not have power	Check for power at the cord and outlet
	Fuse may be blown	Remove front panel and check fuse. If it is blown, replace with 3AG-10A-SB fuse.
	Circuit board component may be bad	Contact your supplier or the factory to return unit for repairs
The display is lighted, but the unit seems to be functioning abnormally	No input from meter	Check flow, check the input indicator light (if the meter is set for low pulse rate, several minutes may pass between blinks)
	Unit improperly set	Press the “Set” button to review each setting
	Output improperly connected to load	Press the appropriate “Test” button to force an output and check (each “Test” button is located directly above the output it forces)
Unit appears to be functioning properly, the test button causes the timer indicator to light, but the appropriate output does not become powered	Possible relay failure	Contact your supplier or the factory to return the unit for relay replacement

The limited warranty set forth below is given by Seametrics, with respect to Seametrics and INW brand products purchased in the United States of America.

Seametrics warrants that products manufactured by Seametrics, when delivered to you in new condition in their original containers and properly installed, shall be free from defects in material and workmanship. **Seametrics products are warranted against defects for a period of two (2) years from date of installation, with proof of install date. If no proof of install date can be provided, warranty period will be two (2) years from date of shipment from Seametrics, as defined on Seametrics' invoice.** Seametrics' obligation under this warranty shall be limited to replacing or repairing the part or parts, or, at Seametrics' option, the products, which prove defective in material or workmanship. The following are the terms of Seametrics' limited warranty:

a. Buyer must give Seametrics prompt notice of any defect or failure and satisfactory proof thereof.
b. Any defective part or parts must be returned to Seametrics' factory or to an authorized service center for inspection.
c. Buyer will prepay all freight charges to return any products to Seametrics' factory, or another repair facility. as designated by Seametrics.
d. Defective products, or parts thereof, which are returned to Seametrics and proved to be defective upon inspection, will be repaired to factory specifications.
e. Seametrics will deliver repaired products or replacements for defective products to the buyer (ground freight prepaid) to the destination provided in the original order.
f. Products returned to Seametrics for which Seametrics provides replacement under this warranty shall become the property of Seametrics.
g. This limited warranty covers all defects encountered in normal use of Seametrics products, and does not apply to the following cases:
    i. Loss of or damage to Seametrics product due to abuse, mishandling, or improper packaging by buyer
    ii. Failure to follow operating, maintenance, or environmental instructions prescribed in Seametrics' instruction manual
    iii. Products not used for their intended purpose
    iv. Alterations to the product, purposeful or accidental
    v. Electrical current fluctuations
    vi. Corrosion due to aggressive materials not approved for your specific product
    vii. Mishandling, or misapplication of Seametrics products
    viii. Products or parts that are typically consumed during normal operation
    ix. Use of parts or supplies (other than those sold by Seametrics) which cause damage to the products, or cause abnormally frequent service calls or service problems
h. A new warranty period shall not be established for repaired or replaced material, products, or supplied. Such items shall remain under warranty only for the remainder of the warranty period on the original materials, products, or supplies.
i. In the event that equipment is altered or repaired by the buyer without prior written approval by Seametrics, all warranties are void. Damage caused by equipment or accessories not manufactured by Seametrics may void the product's warranty.
j. SOFTWARE: The Seller grants the user a non-exclusive license to use Seametrics' software, according to the following limitations and conditions:
    i. The user may install the software on one or more desktop or laptop computers.
    ii. All title and intellectual rights to the software are owned by Seametrics.
    iii. No copies may be made or distributed except as described above.
    iv. The user may not modify or reverse-engineer the software.

THE FOREGOING WARRANTY IS IN LIEU OF ALL OTHER WARRANTIES, WHETHER ORAL, WRITTEN, EXPRESSED, IMPLIED OR STATUTORY. NO IMPLIED WARRANTY, INCLUDING ANY IMPLIED WARRANTY OF MERCHANTABILITY OR FITNESS FOR A PARTICULAR PURPOSE, APPLIED TO THE PRODUCTS AFTER THE APPLICABLE PERIOD OF THE EXPRESS LIMITED WARRANTY STATED ABOVE, AND NO OTHER EXPRESS WARRANTY OR GUARANTY, EXCEPT AS MENTIONED ABOVE, GIVEN BY ANY PERSON OR ENTITY WITH RESPECT TO THE PRODUCTS, SHALL BIND SEAMETRICS. SEAMETRICS SHALL NOT BE LIABLE FOR LOSS OF REVENUES, OR PROFITS, OR INCONVENIENCES, EXPENSE FOR SUBSTITUTE EQUIPMENT OR SERVICE, STORAGE CHARGES, LOSS OF DATA, OR ANY OTHER SPECIAL, INCIDENTAL, OR CONSEQUENTIAL DAMAGE CAUSED BY THE USE OR MISUSE OF, OR INABILITY TO USE THE PRODUCTS, REGARDLESS OF THE LEGAL THEORY ON WHICH THE CLAIM IS BASED, AND EVEN IF SEAMETRICS HAS BEEN ADVISED OF THE POSSIBILITY OF SUCH DAMAGES. IN NO EVENT SHALL RECOVERY OF ANY KIND AGAINST SEAMETRICS BE GREATER IN AMOUNT THAN THE PURCHASE PRICE OF THE PRODUCT SOLD BY SEAMETRICS AND CAUSING THE ALLEGED DAMAGE. WITHOUT LIMITING THE FOREGOING, YOU ASSUME ALL RISK OF LIABILITY FOR LOSS, DAMAGE, OR INJURY TO YOU AND YOUR PROPERTY AND TO OTHERS AND THEIR PROPERTY ARISING OUT OF USE OR MISUSE OF, OR INABILITY TO USE THE PRODUCTS NOT CAUSED DIRECTLY BY THE NEGLIGENCE OF SEAMETRICS.

SOME STATES DO NOT ALLOW LIMITATIONS ON THE DURATION OF AN IMPLIED WARRANTY, SO THE ABOVE LIMITATIONS MAY NOT APPLY TO YOU. SIMILARLY, SOME STATES DO NOT ALLOW THE EXCLUSION OR LIMITATIONS OF CONSEQUENTIAL DAMAGE, SO THE ABOVE LIMITATION OR EXCLUSION MAY NOT APPLY TO YOU. THIS LIMITED WARRANTY GIVES YOU SPECIFIC LEGAL RIGHTS; HOWEVER, YOU MAY ALSO HAVE OTHER RIGHTS WHICH MAY VARY FROM STATE TO STATE.

Seametrics • 19026 72nd Avenue South • Kent, Washington 98032 • USA
(P) 253.872.0284 • (F) 253.872.0285 • 1.800.975.8153 • seametrics.com

LT-65200311r2.0 20180405
4/5/18