PC-Series

Power Supply

PC42

PC3

PC12

Features

- Single or dual power supply
- Rugged plastic housing
- Wall, panel, DIN rail or outlet mounting styles
- 24 Vdc and 12 Vdc, depending on model

Applications

- Power supplies for:
- Flowmeters
- Indicators and controllers
- 4-20 mA loop devices
- Magmeter/indicator combinations

Model	Power	Regulation	Mounting
PC42	Dual 24 Vdc and 12 Vdc	Regulated	Wall or Panel
PC3	24 Vdc	Unregulated	Outlet
PC12	12 Vdc	Regulated	Wall or DIN rail

Seametrics
Precision Flow Measurement
An ONICON Brand

Certified Company ISO 9001

PC42

The **PC42** dual regulated power supply is designed for applications in which a magmeter is used together with a 4-20 mA transmitter such as the AO55 or FT440. Although a single 24 Vdc power supply can be used, there is a risk of a ground loop interfering with proper operation of the 4-20 mA current loop. This risk is eliminated by the dual power supply.

The housing is rugged molded ABS plastic, NEMA 4X rated. It can be wall or panel mounted. The PC42 can be hardwired to the AC main supply or plugged into a standard outlet using the included power cord. Inside there are separate terminals to connect the two devices to the fully isolated supplies.

Specifications*

Input Power	115 Vac/230 Vac ±10%, internally switchable, 50/60 Hz
Output Voltage/Current *(Regulated)*	12 Vdc ±1% @ 350 mA 24 Vdc ±4% @ 100 mA
Terminal Block Wire	22–12 AWG
Operating Temperature	-4˚ to 140˚ F (-20˚ to 60˚ C)
Environmental	NEMA 4X

** Specifications subject to change. Please consult our website for current data (seametrics.com)*

Installation and Connections

Remove the cover to expose the four mounting holes at the bottom of the cover screw tubes. Mark the mounting surface, drill, and attach with screws. Do not drill additional holes in the box. Doing so will allow moisture into the enclosure.

Caution 1: Important! Do not connect power to the PC42 until all connections have been made and confirmed correct, and the cover has been put back into place.

Caution 2: It is essential for safety and proper operation to use a ground connection for the 115 Vac power. Do not use this power supply without proper grounding.

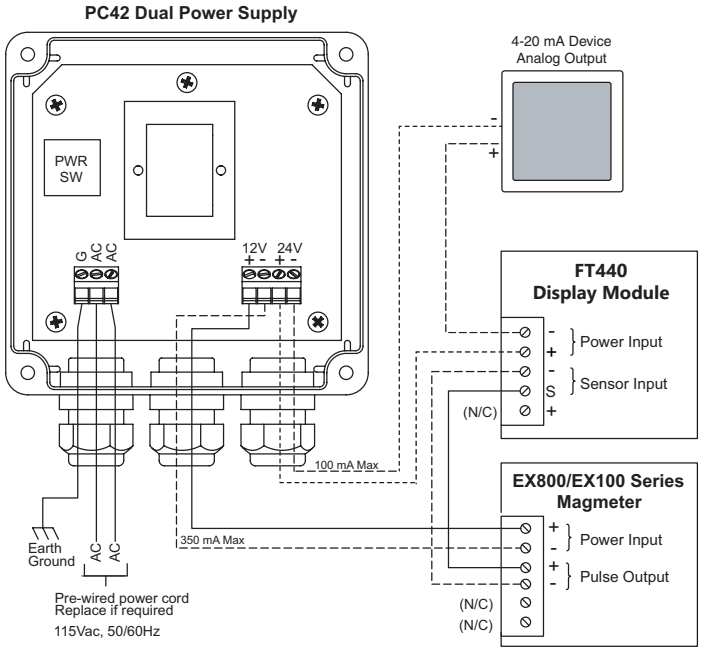

Dimensions

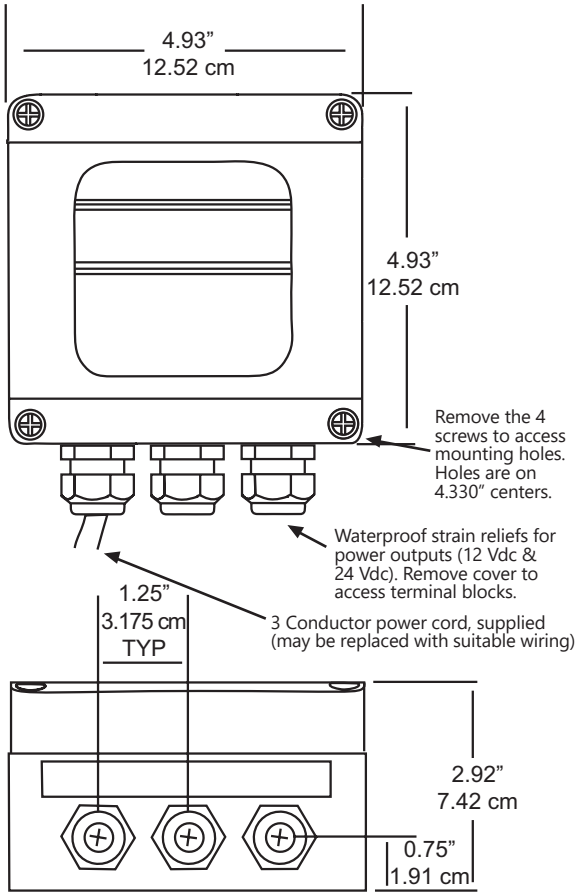

PC3

The **PC3** is designed as a convenient 24 Vdc power supply for use with a 120 Vac outlet. Terminals allow user connection of wiring on the low-voltage side. Since this is an unregulated power supply, actual voltage may be as high as 36 Vdc, depending on line voltage and load. The PC3 should be used only in applications where these voltages are tolerated.

Specifications*

Input Power	120 Vac ±10%, 60 Hz, 19 W
Output Voltage/Current	24 Vdc @ 500 mA
Regulation	Unregulated, may vary up to 36 Vdc
Output Terminal Wire	22–18 AWG
Operating Temperature	32˚ to 140˚ F (0˚ to 60˚ C)
Safety Agency Approvals	UL, UL/C (Canada) listed

** Specifications subject to change. Please consult our website for current data (seametrics.com)*

Dimensions

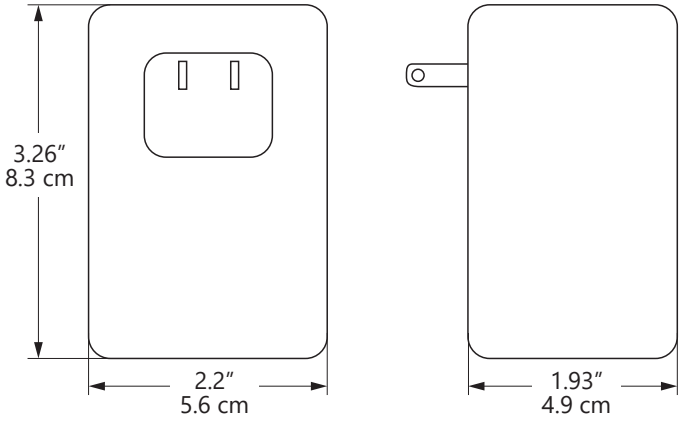

Typical Application

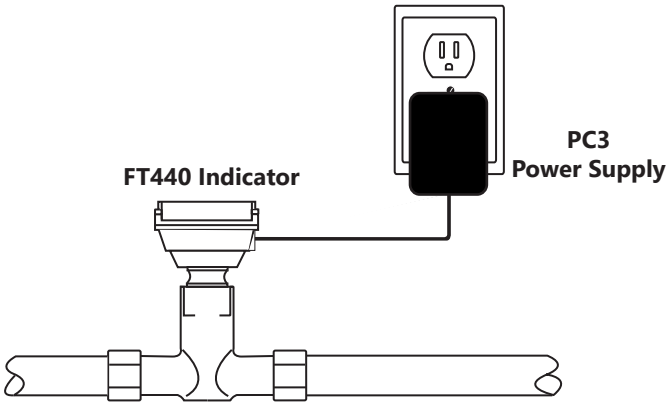

PC12

UL/CSA/CE marked, the **PC12** is a low noise, switching power supply for magmeter applications where 4-20 mA loop power is not required. The PC12 is designed for wall or DIN rail mounting.

Specifications*

Input Power	85–264 Vac, 45–65 Hz
Output Voltage/Current	12 Vdc ±1%, /1A (Regulated)
Output Noise	< 10 mV p-p
Screw Terminal Wire	12–24 AWG
MTBF	500,000 hours
Operating Temperature	-13˚ to 158˚ F (-25˚ to 70˚ C)
Regulatory Approvals	UL, UL/C (Canada) listed, CE
Environmental	IP20, non-condensing

** Specifications subject to change. Please consult our website for current data (seametrics.com)*

Dimensions

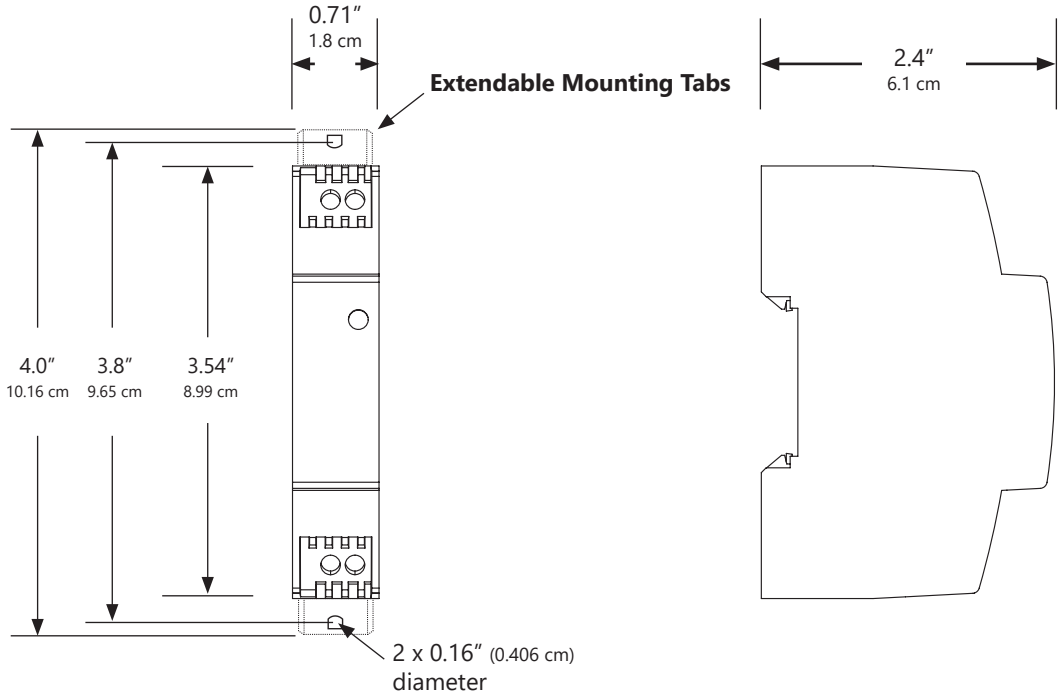

Contact Your Supplier

How to Order

MODEL

Dual 12/24 Vdc, regulated, wall or panel mount = **PC42**

Single 24 Vdc, unregulated, outlet = **PC3**

Single 12 Vdc, regulated, wall or DIN rail = **PC12**