FT500

Batch Flow Processor Instructions

Seametrics
Precision Flow Measurement
An ONICON Brand

PROUDLY MADE IN THE USA

Certified Company ISO 9001

General Information

General Information ..... Page 4
Features ..... Page 4
Dimensions ..... Page 4
Specifications ..... Page 4

Installation

Mounting ..... Page 5
Connections ..... Page 5

Settings and Operation

FT520 Batch Controller ..... Page 6
FT520-84 Filter Regeneration ..... Page 7
FT520-86 Flowrate Alarm ..... Page 8
FT522 Usage Monitor ..... Page 9

Repair/Troubleshooting

Repair ..... Page 10
Troubleshooting ..... Page 10

Warranty

Seametrics Limited Warranty ..... Page 11

The **FT500-Series** is a batching flow processor with additional output controls. It is designed for use with Seametrics flow meters and flow sensors, as well as other manufacturer's products which have frequency output proportional to flow. In addition to batch functions, the FT500-Series indicates flow rate, and other data in large 3/8" (9.66 mm) digits on an easily-read, backlit display. Units of measure are user selectable, and range from milliliters per second to millions of gallons per day. The unit can be 110 Vac powered with a standard 3-wire cord (included), 220 Vac powered (optional), or DC powered through an internal terminal strip (battery not included).

An analog output of 4-20 mA is available both in active and passive loop configuration, and in 0-5 Vdc or 0-10 Vdc outputs, and can be used in applications such as flow rate logging. Two programmable pulse scaled outputs are also standard, and can be used, for example, to provide proportional chemical feed with a pulse-responsive metering pump.

The housing is supplied with two brackets for wall-mount applications, or the top/bottom housings can be easily separated and reassembled for panel-mount.

Features

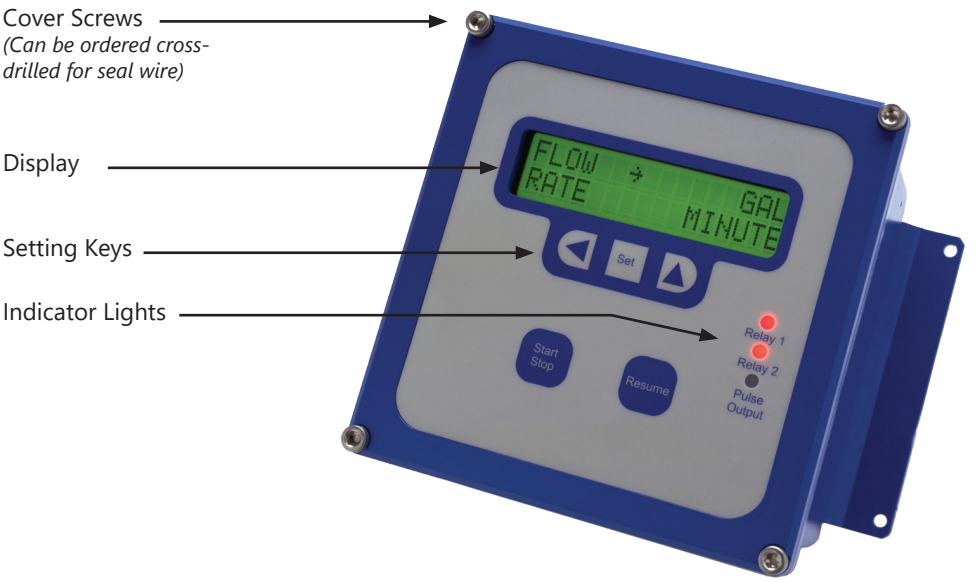

Dimensions

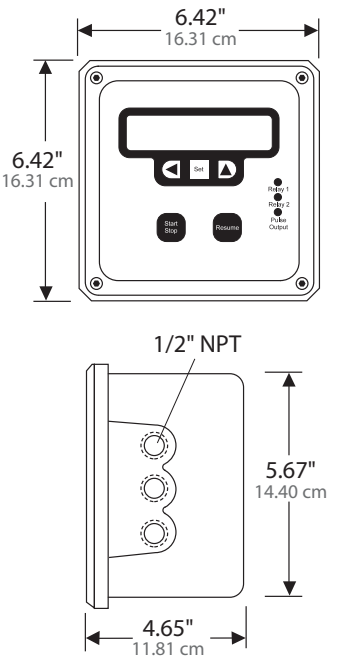

Specifications*

Power	115 Vac, 50/60 Hz @ 125 mA, 12 Vdc @ 750 mA or 10–16 Vdc (220 Vac optional)
Temperature	32˚ - 130˚ F (0˚ - 55˚ C)
Enclosure	Precision cast aluminum, NEMA 4X, panel or wall mount configuration
Batch Outputs	Two form C (SPDT) relays, 115 Vac 6 A max
Max Pulse Output	100 mA at 60 Vac/Vdc, opto-isolated, open-collector
Memory Type	Non-volatile EEPROM with auto-backup
Sensor Power	12 Vdc, 10 mA
Display	Totalizer = 8 digit, Rate = 5 digit, backlit
Units	Volume = Gallons, cubic feet, cubic meters, millions of gallons, milliliters, fluid ounces, pounds, liters Time = Seconds, minutes, hours, days
Analog Output	4-20 mA passive opto-isolated; 4-20 mA active; 0–5 Vdc, or 0–10 Vdc
Sensor Input	1–1000 Hz, ESD protected, interfaces to current sinking sensor output
Environmental	NEMA 4X, IP66
Setup Memory	Non-volatile EEPROM, auto-backup

**Specifications subject to change. Please consult our web site for current data (seametrics.com)*

Mounting

Wall Mounting. Using the four screws provided, attach the two foot brackets to the sides of the enclosure. Then attach the unit to any secure surface by inserting screws through the mounting holes in the foot brackets.

Panel Mounting. Follow the dimensions below for "Panel Cutout". Be sure to include the four corner screw holes. After cutting and drilling, place the front plate on the front side of the panel with its gasket against the panel, and the remainder of the square housing on the back side. Slide the screws through the four holes drilled in the panel, and into the threaded holes in the housing. Tighten until the gasket is firmly compressed against the panel.

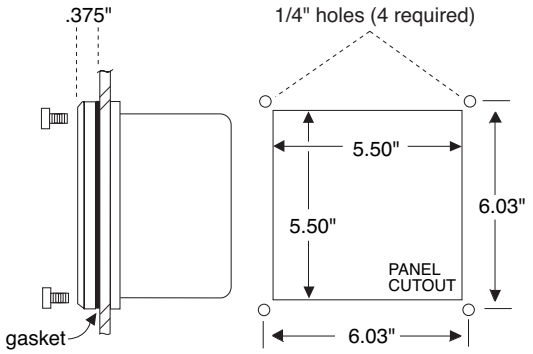

Connections

Caution: Always disconnect power to the unit before opening the terminal cover. Do not reconnect power until all connections have been made and the terminal cover has been replaced.

Expose Terminals. Remove the four screws which hold the front plate to the lower housing flange. Remove front plate. The display board is attached to this front plate. It is also connected to the power board by a ribbon cable. This cable can be disconnected while making connections. Connections can be made inside the enclosure, or the terminals can be unplugged by gentle tugging for easier access.

Batch Control Connection (if used). Connect the valve or other device(s) to be controlled for starting and stopping the batch to the appropriate relay terminals. Note: if the staged shutoff ("prewarn") will not be used, connect to relay one only. Relay 1 remains energized for the entire batch cycle. If a staged shutoff is desired, connect the main valve to Relay 2 (early shutoff) and the low-flow valve to Relay 1.

Monitor Alarm Connection (if used). Connect the alarm devices to the appropriate relay terminals. Note that the relays have both normally-open (NO) and normally-closed (NC) contacts.

Analog Connection (if used). This output can be configured 4-20 mA, 0-5 V or 0-10 V by placing a jumper in the correct position on the analog header. The analog switch next to the header selects active (powered) or passive (unpowered) output. NOTE: Consult factory to change internal firmware when changing switch position. When using the 12 Vdc powered input you may only select passive output.

Power Connection. Connect AC or DC power as desired to the appropriate terminals. For safety, if using AC power, be sure to connect the ground terminal provided to a good earth ground. If using 12 Vdc, use a 12 Vdc 500 mA power supply. Replace the front panel, taking care to reconnect the ribbon cable if it has been disconnected. When power is switched on, the display should light up immediately with meaningful letters or digits.

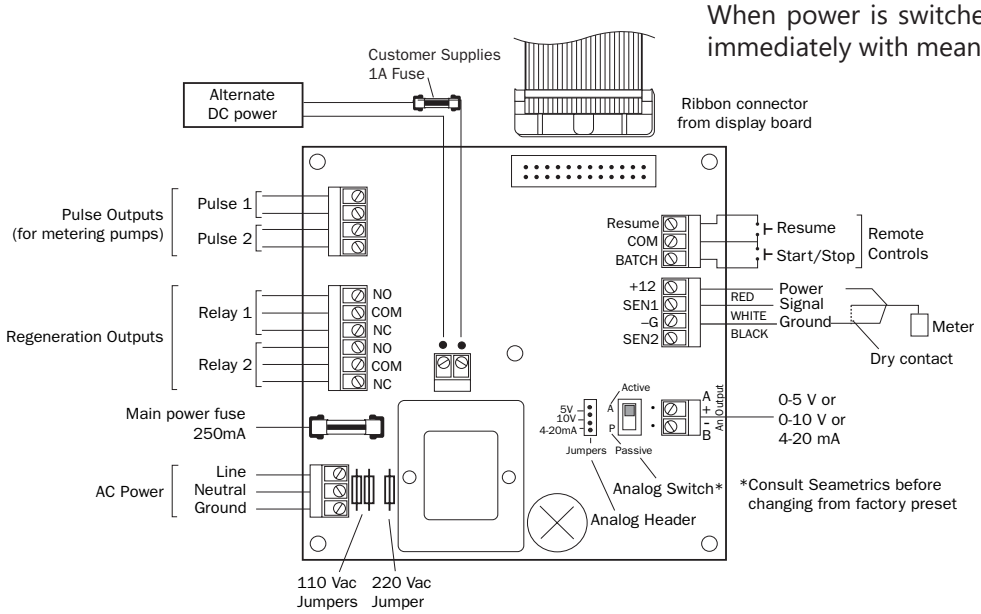

Connections

FT520 Batch Controller

In Batch Processing Mode, the display indicates a flow rate on the top line, and one of three user-selectable configurations on the bottom line: an accumulated total flow (resettable), accumulated batch flow, or batch process bar graph. The batch output is controlled via two relays. The main relay starts and stops the batch as a set, or the auxiliary "prewarn" relay can be used to operate a second valve. This allows increased accuracy by engaging a staged shut off at the end of the batch.

Settings

Use left arrow and up arrow keys to change settings. Press SET to advance to next menu.

- **SET Batch Size**
  Set the batch size for the desired number of units. If the staged shut-off feature is not being used, this is the only setting required for the batch.
- **SET Prewarn Size**
  This is only used for a staged shut-off. The number set is the number of units early (before the end of the batch) that Relay 2 will shut off.
- **SET Flow/Rate**
  Select the particular volume unit desired (gallons, liters, etc.). Then switch to time units and select the time unit desired (minutes, hours, etc.).
- **SET Decimal**
  Select none, one, or two decimal places on the flow units.
- **SET K-Factor**
  The unit will not function properly until this number is entered. The K-factor is simply the number of pulses which the flow meter or flow sensor puts out per gallon of liquid. It is marked on the Model/Serial tag of Seametrics flow meters and flow sensor fittings. On adjustable depth flow sensors, the K-factor must be taken from the chart in the flow sensor instructions, based on pipe size.
- **SET Pulse (scaled) Output 1**
  An output pulse is activated at the selected volume intervals if this feature is in use. If a pulse output is not needed, pulse out does not need to be set.
- **SET Pulse (scaled) Output 2**
  An output pulse is activated at the selected volume intervals if this feature is in use. If a pulse output is not needed, pulse out does not need to be set.
- **SET 20 mA Rate**
  The "SET 20 mA RATE" programs the maximum flow rate at which the output is 20 mA full scale, at 5 V or 10 V.
- **Clear Total**
  This function resets the accumulated total back to zero. It is unrelated to the regeneration function, and can be ignored unless it is needed.

Operation

Start Batch. Pressing the Start/Stop key starts the batch by energizing Relay 1. The indicator for Relay 1 will light, indicating normal operation. The indicator for Relay 2 may also light, depending on the prewarn setting. If staged shut-off is being used, the Relay 2 indicator light should go out before the end of the batch, at the prewarn set point. The batch will continue on to the set amount unless it is halted in the middle of the process by pressing the Start/Stop key again.

Stop Batch/Resume Batch. Pressing the Start/Stop key anywhere in the batch will stop it. It will remain stopped until the Resume key is pressed. Pressing the Start/Stop key again allows the batch to restart from zero.

Choice of Displays for Batching. When in Operation Mode, press the UP Arrow to change the type of display. Running Totalizer ("T") accumulates a Total Flow until it is reset. Batch ("B") accumulates the flow of the present batch only, then resets. Bar Graph ("▯") graphically indicates from left to right, how much of the batch has already accumulated.

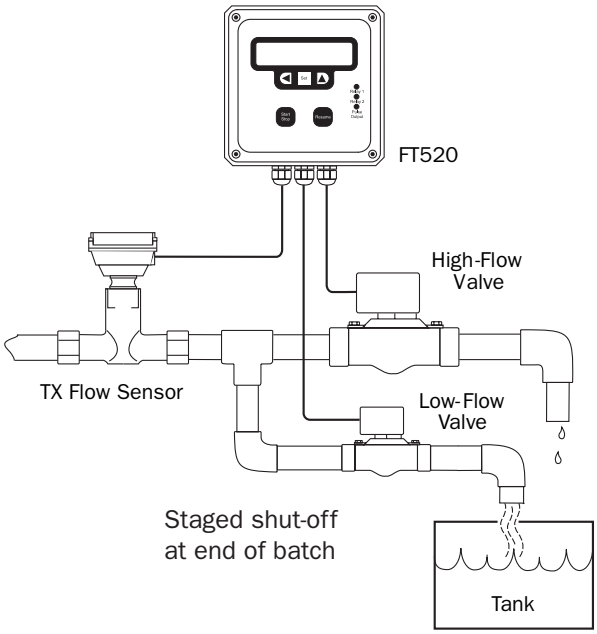

Staged Shut-Off Application

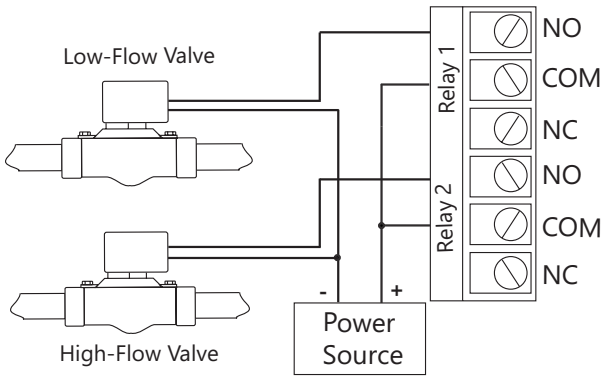

Connection for Staged Shut-Off

FT520-84 Filter Regeneration

In Filter Regeneration Mode, the display indicates a flow rate on the top line, and one of two configurations on the bottom line: an accumulated total flow (resettable), or batch process remainder. The regeneration process is initiated by setting a target volume, a value for regeneration time as well. A single relay or alternate relay setting allows control of either single tank or alternating dual tank systems.

On the input side, this model can be used with Seametrics flow sensors and meters, as well as with water meters from other manufacturers. The output can be used to initiate regeneration in a variety of one-tank and two-tank water treatment systems. In addition to the regeneration functions, this unit features displays of flow rate and accumulated flow, as well as programmable pulse output and a 4-20 mA analog output, for use with remote recorders. There are two regeneration relays, which can be used for alternating regeneration of two tanks. The outputs remain on for a duration programmed by the user, depending on the requirements of the regeneration valve being used. A programmable pulse output can be used as needed to control a chemical metering pump, for controlled chemical addition to the water stream.

Settings

Use Left Arrow and UP Arrow keys to change settings. Press SET to advance to next menu.

- **SET Flow/Rate**
  Select the particular volume unit desired (gallons, liters, etc.). Then switch to time units and select the time unit desired (minutes, hours, etc.).
- **SET Decimal**
  Select none, one, or two decimal places on the flow units.
- **SET K-Factor**
  The unit will not function properly until this number is entered. The K-factor is simply the number of pulses which the flow meter or flow sensor puts out per gallon of liquid. It is marked on the Model/Serial tag of Seametrics flow meters and flow sensor fittings. On adjustable depth flow sensors, the K-factor must be taken from the chart in the flow sensor instructions, based on pipe size.
- **SET Pulse (scaled) Output 1**
  An output pulse is activated at the selected volume intervals if this feature is in use. If a pulse output is not needed, pulse out does not need to be set.
- **SET Pulse (scaled) Output 2**
  An output pulse is activated at the selected volume intervals if this feature is in use. If a pulse output is not needed, pulse out does not need to be set.
- **SET 20 mA Rate**
  The "SET 20 mA RATE" programs the maximum flow rate at which the output is 20 mA full scale, at 5 V or 10 V.
- **SET Regeneration Volume**
  This is the volume (in the units you have selected; typically gallons) at which the relay energizes to initiate a regeneration cycle.
- **SET Regeneration Time in seconds (3 digits)**
  This is the length of time in seconds, the relay remains energized to initiate regeneration. Enter a value slightly over the minimum time required by the regeneration valve to begin a cycle.
- **SET Relay Mode to one or alternate relays**
  Choose between single relay (Relay No. 1) and dual relay (Alternate Relays) operation. In alternate relay mode, the first regeneration will use Relay 1, the next will use Relay 2, and successive regenerations will switch between the two.
- **Clear Total**
  This function resets the accumulated total back to zero. It is unrelated to the regeneration function, and can be ignored unless it is needed.

Operation

Choice of Displays. When all of the settings have been entered, the next press of the SET Key puts the unit in operation. If a T appears at the left side of the display, the values shown are flow rate and running total. If there is no T, the values shown are flow rate and units remaining until regeneration. The total increases with flow, and the regeneration quantity counts down. Use the UP Arrow to choose the preferred display, usually regeneration quantity.

Regeneration Initiation. When the regeneration quantity number first reaches 0, Relay No. 1 energizes for the length of time which has been set. The regeneration quantity immediately resets and begins counting down again. If alternating mode has been selected, the next time it reaches 0, Relay No. 2 will energize, and the cycle after that, will return to Relay No. 1. An output can be manually forced at any time by pressing the Start/Stop key. The relay will energize for the set time, and regeneration volume will return to its original setting to begin counting down again.

Alternating Tanks Application

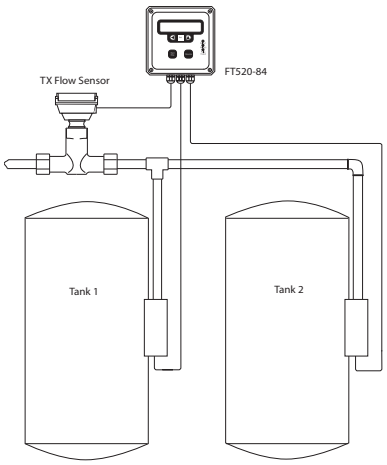

Connections for Alternating Tanks

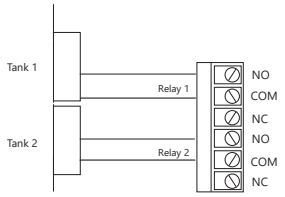

FT520-86 Flowrate Alarm

In Flowrate Alarm Mode, the display indicates a flow rate on the top line, and on the bottom line, an accumulated total flow (resettable). The user sets a minimum and maximum flow rate, and if the flow exceeds the min/max parameter, Relay 1 or Relay 2 will close. The output relay will stay latched until the flow rate increases/decreases back between the min/max settings.

Settings

Use Left Arrow and UP Arrow keys to change settings. Press SET to advance to next menu.

- **SET Flow/Rate**
  Select the particular volume unit desired (gallons, liters, etc.). Then switch to time units and select the time unit desired (minutes, hours, etc.).
- **SET Decimal**
  Select none, one, or two decimal places on the flow units.
- **SET K-Factor**
  The unit will not function properly until this number is entered. The K-factor is simply the number of pulses which the flow meter or flow sensor puts out per gallon of liquid. It is marked on the Model/Serial tag of Seametrics flow meters and flow sensor fittings. On adjustable depth flow sensors, the K-factor must be taken from the chart in the flow sensor instructions, based on pipe size.
- **SET Pulse (scaled) Output 1**
  An output pulse is activated at the selected volume intervals if this feature is in use. If a pulse output is not needed, pulse out does not need to be set.
- **SET Pulse (scaled) Output 2**
  An output pulse is activated at the selected volume intervals if this feature is in use. If a pulse output is not needed, pulse out does not need to be set.
- **SET 20 mA Rate**
  The "SET 20 mA RATE" programs the maximum flow rate at which the output is 20 mA full scale, at 5 V or 10 V.
- **SET Low Flow Alarm**
  Set the desired minimum flow rate at which you want an alarm to occur. Low alarm corresponds to alarm Relay 1 (see Connections diagram).
- **SET Hi Flow Alarm**
  Set the desired maximum flow rate at which you want an alrm to occur. High alarm corresponds to alarm Relay 2 (see Connections diagram).
- **Clear Total**
  This function resets the accumulated total back to zero. NOTE: The "Start/Stop" and "Resume" keys are not used in flow alarm mode.

Operation

The last press of the key returns the unit to operation mode.

Flow Monitoring. The flow rate and accumulated displays begin showing current data. The accumulated total increases indefinitely unless it is reset.

Alarms. Alarm Relay 2 activates when flow reaches the high alarm set point. Because of the built-in hysteresis, the relay does not deactivate until the flow rate has reached 10% below the high alarm set point. Similarly, alarm Relay 1 activates when flow reaches the low alarm set point, and does not deactivate until flow returns to 10% above the low alarm set point.

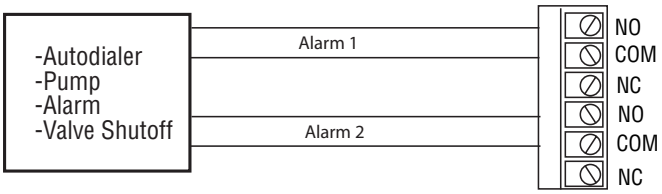

FT522 Usage Monitor

In Usage Monitor Mode, the display indicates one of two configurations: an elapsed time and elapsed flow, or a flow rate and accumulated total flow (resettable). A time period is set to monitor for a set maximum total flow. If the total flow is reached within the set time, an output relay is closed. The output relay stays latched until the system either resets automatically after the set time, or is reset manually via the StartStop button. A reset condition clears the elapsed time and flow, but not the accumulated total flow.

The FT522 is a flowmeter monitor with added output and alarm features. It is designed for use with Seametrics flow meters and sensors, as well as other units which have a pulse or frequency output. It displays flow rate and total in large digits on an easily-read backlit display. Units are user selectable between gallons, cubic feet, and cubic meters. The primary output of this unit is a user-set alarm relay which signals excessive total flow within a given time period (up to 48 hours). This is typically used to detect an elevated usage level in a cooling tower or potable water application. The dual relays can be connected to an alarm, autodialer, or any other switch-controllable device. In addition to the usage alarm, the FT522 has analog output (4-20 mA, 0-5 Vdc or 0-10 Vdc) and programmable pulse output. These can be used with an external data logger or to provide proportional chemical feed, using an externally-controlled metering pump.

Settings

Use Left Arrow and UP Arrow keys to change settings. Press SET to advance to next menu.

- **SET Flow/Rate**
  Select the particular volume unit desired (gallons, liters, etc.). Then switch to time units and select the time unit desired (minutes, hours, etc.).
- **SET Decimal**
  Select none, one, or two decimal places on the flow units.
- **SET K-Factor**
  The unit will not function properly until this number is entered. The K-factor is simply the number of pulses which the flow meter or flow sensor puts out per gallon of liquid. It is marked on the Model/Serial tag of Seametrics flow meters and flow sensor fittings. On adjustable depth flow sensors, the K-factor must be taken from the chart in the flow sensor instructions, based on pipe size.
- **SET Pulse (scaled) Output 1**
  An output pulse is activated at the selected volume intervals if this feature is in use. If a pulse output is not needed, pulse out does not need to be set.
- **SET Pulse (scaled) Output 2**
  An output pulse is activated at the selected volume intervals if this feature is in use. If a pulse output is not needed, pulse out does not need to be set.
- **SET Time Period from 01–48 hours**
  This is the monitoring period at the end of which the unit will alarm if total flow has exceeded its setting. Set this monitoring period for 01–48 hours. NOTE: that if the digit to the right is set to "9", the digit to the left will only go to "3" This is because 48 is the maximum setting allowed.
- **SET Alarm Reset**
  Set to automatic or manual.
- **SET Alarm Point in Flow (8 digits)**
  This is the maximum total flow allowed in the time period set above. Use the same procedure as above to set this value, up to eight digits. The units are those previously chosen.
- **SET 20 mA Rate**
  The "SET 20 mA RATE" programs the maximum flow rate at which the output is 20 mA full scale, at 5 V or 10 V.
- **Clear Total**
  This function resets the accumulated total back to zero in the rate/total configuration. It does not affect the data in the elapsed time/flow configuration.

Operation

The last press of the key returns the unit to operation mode. In this mode, pressing either arrow key will toggle back and forth between two displays, one for flow monitoring and the other for usage monitoring.

Usage Alarm. Pressing the Start/Stop key will start the clock and zero the total of the usage monitor. The clock will increase and the total will accumulate (provided there is flow) until the end of the monitoring period. At that time, the usage total and clock will zero automatically and the cycle will start over. If the usage total ever reaches its alarm point within the monitoring time, the usage alarm relays will energize and remain on until the Resume key is pressed. If the Resume key is pressed during a monitoring cycle, it will freeze the cycle at its current point. Pressing it again allows the cycle to resume where it left off.

Flow Monitoring. The "Rate" indication gives the current rate of flow. "Total" is a running total of flow which increases indefinitely unless it is reset.

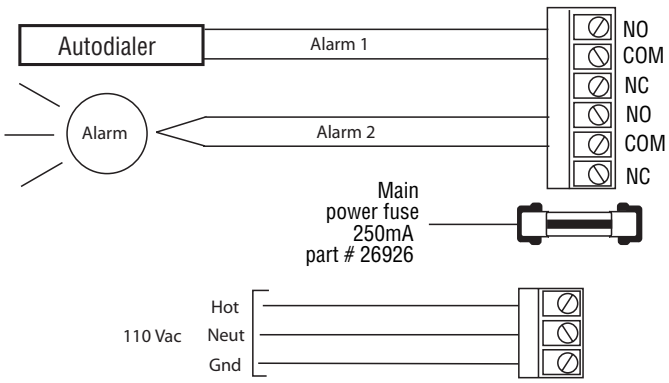

Repair

The only field-repairable component on the FT520 is the fuse. If failure is due to a cause other than a blown fuse, it is necessary to replace the entire board stack. Contact your distributor for information.

Troubleshooting

Problem	Probable Causes	Things to try...
Blank Display	No power to unit	Check for minimum 12 Vdc at power terminals
	Short in sensor circuit	Disconnect sensor, see if display returns (zero flow rate)
Display missing segments	Damaged display module	Contact distributor for return/replacement
Display reading meaningless characters	Unit's microcontroller crashed	Disconnect and reconnect power. If problem repeats, contact distributor for return/ replacement
Display reads normally, flow rate incorrect	Wrong K-factor entered	Check K-factor, enter proper one if in error
Display reads normally, no (or wrong) pulse output	Wrong pulse output setting	Check "SetP" to see if it is set correctly
	Polarity reversed on pulse output terminals	Reverse leads and see if problem corrects
Display reads normally, no (or wrong) 4-20 mA output	Wrong 20 mA setting	Check "Set20" to see if it matches target top flow rate
	Inadequate loop power supply voltage	Check voltage. For 4-20 mA applications 24 Vdc recommended
	Polarity incorrect in 4-20 mA loop circuit	Compare to Connections diagram
Display reads zero when there is flow	Flow sensor failed	Consult flow sensor manual for how to test
	Break in flow sensor circuit	Check for continuity with multimeter
Display reads flow rate when there is none	Long flow sensor wire, running parallel to power lines	Reroute wire or switch to shielded wire
	Flow sensor malfunction	See flow sensor manual to check

The limited warranty set forth below is given by Seametrics, with respect to Seametrics and INW brand products purchased in the United States of America.

Seametrics warrants that products manufactured by Seametrics, when delivered to you in new condition in their original containers and properly installed, shall be free from defects in material and workmanship. **Seametrics products are warranted against defects for a period of two (2) years from date of installation, with proof of install date. If no proof of install date can be provided, warranty period will be two (2) years from date of shipment from Seametrics, as defined on Seametrics' invoice.** Seametrics' obligation under this warranty shall be limited to replacing or repairing the part or parts, or, at Seametrics' option, the products, which prove defective in material or workmanship. The following are the terms of Seametrics' limited warranty:

a. Buyer must give Seametrics prompt notice of any defect or failure and satisfactory proof thereof.
b. Any defective part or parts must be returned to Seametrics' factory or to an authorized service center for inspection.
c. Buyer will prepay all freight charges to return any products to Seametrics' factory, or another repair facility. as designated by Seametrics.
d. Defective products, or parts thereof, which are returned to Seametrics and proved to be defective upon inspection, will be repaired to factory specifications.
e. Seametrics will deliver repaired products or replacements for defective products to the buyer (ground freight prepaid) to the destination provided in the original order.
f. Products returned to Seametrics for which Seametrics provides replacement under this warranty shall become the property of Seametrics.
g. This limited warranty covers all defects encountered in normal use of Seametrics products, and does not apply to the following cases:
    i. Loss of or damage to Seametrics product due to abuse, mishandling, or improper packaging by buyer
    ii. Failure to follow operating, maintenance, or environmental instructions prescribed in Seametrics' instruction manual
    iii. Products not used for their intended purpose
    iv. Alterations to the product, purposeful or accidental
    v. Electrical current fluctuations
    vi. Corrosion due to aggressive materials not approved for your specific product
    vii. Mishandling, or misapplication of Seametrics products
    viii. Products or parts that are typically consumed during normal operation
    ix. Use of parts or supplies (other than those sold by Seametrics) which cause damage to the products, or cause abnormally frequent service calls or service problems
h. A new warranty period shall not be established for repaired or replaced material, products, or supplied. Such items shall remain under warranty only for the remainder of the warranty period on the original materials, products, or supplies.
i. In the event that equipment is altered or repaired by the buyer without prior written approval by Seametrics, all warranties are void. Damage caused by equipment or accessories not manufactured by Seametrics may void the product's warranty.
j. SOFTWARE: The Seller grants the user a non-exclusive license to use Seametrics' software, according to the following limitations and conditions:
    i. The user may install the software on one or more desktop or laptop computers.
    ii. All title and intellectual rights to the software are owned by Seametrics.
    iii. No copies may be made or distributed except as described above.
    iv. The user may not modify or reverse-engineer the software.

THE FOREGOING WARRANTY IS IN LIEU OF ALL OTHER WARRANTIES, WHETHER ORAL, WRITTEN, EXPRESSED, IMPLIED OR STATUTORY. NO IMPLIED WARRANTY, INCLUDING ANY IMPLIED WARRANTY OF MERCHANTABILITY OR FITNESS FOR A PARTICULAR PURPOSE, APPLIED TO THE PRODUCTS AFTER THE APPLICABLE PERIOD OF THE EXPRESS LIMITED WARRANTY STATED ABOVE, AND NO OTHER EXPRESS WARRANTY OR GUARANTY, EXCEPT AS MENTIONED ABOVE, GIVEN BY ANY PERSON OR ENTITY WITH RESPECT TO THE PRODUCTS, SHALL BIND SEAMETRICS. SEAMETRICS SHALL NOT BE LIABLE FOR LOSS OF REVENUES, OR PROFITS, OR INCONVENIENCES, EXPENSE FOR SUBSTITUTE EQUIPMENT OR SERVICE, STORAGE CHARGES, LOSS OF DATA, OR ANY OTHER SPECIAL, INCIDENTAL, OR CONSEQUENTIAL DAMAGE CAUSED BY THE USE OR MISUSE OF, OR INABILITY TO USE THE PRODUCTS, REGARDLESS OF THE LEGAL THEORY ON WHICH THE CLAIM IS BASED, AND EVEN IF SEAMETRICS HAS BEEN ADVISED OF THE POSSIBILITY OF SUCH DAMAGES. IN NO EVENT SHALL RECOVERY OF ANY KIND AGAINST SEAMETRICS BE GREATER IN AMOUNT THAN THE PURCHASE PRICE OF THE PRODUCT SOLD BY SEAMETRICS AND CAUSING THE ALLEGED DAMAGE. WITHOUT LIMITING THE FOREGOING, YOU ASSUME ALL RISK OF LIABILITY FOR LOSS, DAMAGE, OR INJURY TO YOU AND YOUR PROPERTY AND TO OTHERS AND THEIR PROPERTY ARISING OUT OF USE OR MISUSE OF, OR INABILITY TO USE THE PRODUCTS NOT CAUSED DIRECTLY BY THE NEGLIGENCE OF SEAMETRICS.

SOME STATES DO NOT ALLOW LIMITATIONS ON THE DURATION OF AN IMPLIED WARRANTY, SO THE ABOVE LIMITATIONS MAY NOT APPLY TO YOU. SIMILARLY, SOME STATES DO NOT ALLOW THE EXCLUSION OR LIMITATIONS OF CONSEQUENTIAL DAMAGE, SO THE ABOVE LIMITATION OR EXCLUSION MAY NOT APPLY TO YOU. THIS LIMITED WARRANTY GIVES YOU SPECIFIC LEGAL RIGHTS; HOWEVER, YOU MAY ALSO HAVE OTHER RIGHTS WHICH MAY VARY FROM STATE TO STATE.

Seametrics • 19026 72nd Avenue South • Kent, Washington 98032 • USA
(P) 253.872.0284 • (F) 253.872.0285 • 1.800.975.8153 • seametrics.com

LT-65200029r2.0 20180404
4/4/18