FT430/440/450

Rate/Total Indicator Instructions

Optional Protective Cover Closed

Seametrics
Precision Flow Measurement
An ONICON Brand

PROUDLY MADE IN THE USA

Certified Company ISO 9001

General Information

General Information ..... Page 3
Specifications ..... Page 3
Features ..... Page 4
Pulse Output Functions ..... Page 4

Installation

Wall Mount ..... Page 5
Meter Mount ..... Page 5
Panel Mount ..... Page 5

Connection Diagrams

FT450 Standard ..... Page 6
FT430/3-Wire Mechanical Meter ..... Page 6
Connections for FT430-139 or FT440-139—115Vac Option ..... Page 7
FT440/3-wire Mechanical/Dual Scaled Pulse Output ..... Page 7
FT440/EX Magmeter ..... Page 8
FT440-139/EX Magmeter ..... Page 8

Settings

K-Factor ..... Page 9
Changing Flow Indicator Settings ..... Page 9
Menu Navigation ..... Page 9
FT440 Secondary Menu Functions ..... Page 11

Troubleshooting

Problems ..... Back
Probable Causes ..... Back
Things to Try ..... Back

The **FT430/440/450** flow computers are microcontroller-based indicator/transmitters that interface with pulse output flow sensors to compute and display flow rate, flow total, and also generate output signals representing flow. The FT430 and FT450 have one scaled pulse output and one pulse pass through. The FT440 has two scaled pulse outputs. Galvanic isolation is provided for most pulse outputs.

The FT450 is battery powered while the FT430 may be powered by an external DC power source or an optional internal AC power supply*. The FT440 is a "two-wire" or "loop powered" device, meaning that it is powered by the 4-20 mA loop circuit itself. An optional internal AC power supply* is available for the FT440 with dual 24 and 12VDC outputs to power both the loop and sensors requiring more power than the loop can supply.

Pulse and 4-20mA analog outputs can be used to signal external devices, e.g. certain metering pumps and water treatment controls. Alternatively, one or more pulse outputs can be configured as alarm outputs. These flow computers can be password protected to prevent resetting the total or changing configuration settings.

The FT430/440/450 meters are available in wall and meter mount configurations. The FT430 and FT440 models can also be panel mounted. Some configurations can be converted from wall to meter or meter to wall after installation if needed. Consult factory for details.

Order the FT440 only if a 4-20mA output signal is a requirement and the FT450 if internal battery power is needed. Otherwise the FT430 offers the most flexibility.

**Internal power supply is available for the wall mount option only.*

Features

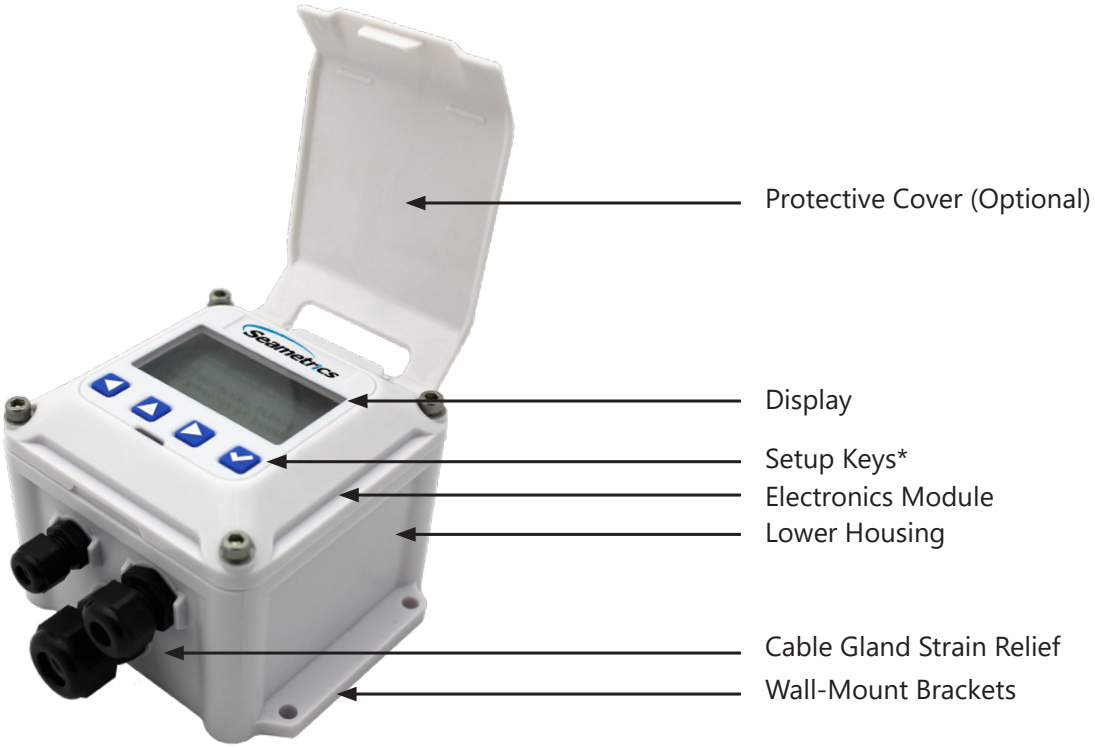

** Includes password protection for tamper prevention when needed*

Specifications*

		FT430	FT440	FT450
Power		7-30Vdc, 4mA	9-30Vdc, 4mA (4-20 mA when loop-powered)	Lithium "C", 3.6Vdc, replaceable. Life is ~5 years depending on usage.
Display	**Rate**	5-digit autorange	5-digit autorange	5-digit autorange
	Total	8-digit	8-digit	8-digit
Units	**Rate Units**	Gallons/Second/Minute/Hour/Day, Liter/Second/Minute/Hour/Day, Cubic Feet/Second/Minute/Hour/Day, Cubic Meters/Second/Minute/Hour/Day, Mega Liters/Day, Million Gallons/Day, Fluid Oz/Second/Minute/Hour/Day, Barrels/Second/Minute/Hour/Day		
	Total Units	Gallon, Gallon x 1000, Liters, Mega Liter, Cubic Meter, Acre Feet, Cubic Feet, Cubic Feet x 1000, Million Gallon, Acre Inch, Fluid Ounce, Barrels		
Outputs	**Pulse Output 1**	Scaled pulse output, high alarm output or low alarm output. Optoisolated on FT430 and FT440.[1]		
	Pulse Output 2	Pulse pass through	Scaled pulse output, high alarm output or low alarm output.[1]	Pulse pass through
	Loop Power Output	N/A	4-20mA Loop[3]	N/A
Set P Range		0.1 - 99999.9 units/pulse	0.1 - 99999.9 units/pulse	0.1 - 99999.9 units/pulse
Input		5V pulse or contact closure	5V pulse or contact closure	Micropower GMR Sensor (square wave)
Input Range		0.75[2] - 2000Hz	0.75[2] - 2000Hz	0.75[2] - 550Hz
K-Factor Range		.001 - 999999.999	.001 - 999999.999	.001 - 999999.999
Flow Alarm Output Range		0.1 - 99999.9	0.1 - 99999.9	0.1 - 99999.9
Operating Temperature		-5˚ to 55˚ C (23˚ to 131˚ F)	-5˚ to 55˚ C (23˚ to 131˚ F)	-5˚ to 55˚ C (23˚ to 131˚ F)
Non-Operating Temperature		-40˚ to 75˚ C (-40˚ to 158˚ F)	-40˚ to 75˚ C (-40˚ to 158˚ F)	-40˚ to 75˚ C (-40˚ to 158˚ F)
Environmental		NEMA 4X, IP67	NEMA 4X, IP67	NEMA 4X, IP67
Regulatory		CE Mark	CE Mark	CE Mark

** Specifications subject to change • Please consult our website for current data (www.seametrics.com).*
1 Scaled output pulses have a fixed width of 100ms. Maximum pulses per second is 6.5Hz
2 For pulse frequencies <1 Hz, increase setting in SET F menu to 3 or higher.
3 When calculating total resistive load for loop power (volts/.020 amps = ohms) be sure to subtract 400 Ω from the total to account for basic operation of the FT440

Pulse Output Function Table

PULSE OUTPUT 1 (SCALED)	FT430	FT440	FT450
TYPE	Current sinking	Current sinking	Current sinking
MAX. VOLTAGE	36 Vdc	36 Vdc	36 Vdc
MAX. CURRENT	100 mA	100 mA	100 mA
MAX. FREQUENCY	6.5 Hz	6.5 Hz	6.5 Hz
PULSE WIDTH	100 ms	100 ms	100 ms
ISOLATION	300 V	300 V	NOTE 1
CONFIGURABLE AS ALARM	YES (High or Low)	YES (High or Low)	YES (High or Low)
PULSE OUTPUT 2 (SCALED)	**FT430**	**FT440 (Note 2)**	**FT450**
TYPE	Not Available	Current sinking	Not Available
MAX. VOLTAGE		36 Vdc	
MAX. CURRENT		100 mA	
MAX. FREQUENCY		6.5 Hz	
PULSE WIDTH		100 ms	
ISOLATION		300 V	
CONFIGURABLE AS ALARM		YES (High or Low)	
PULSE OUTPUT 2 (PASS-THROUGH)	**FT430**	**FT440**	**FT450**
TYPE	Current sinking	Not Available	Current sinking
MAX. VOLTAGE	36 Vdc		36 Vdc
MAX. CURRENT	10 mA		100 mA
MAX. FREQUENCY	2000 Hz NOTE 2		550 Hz
PULSE WIDTH	SAME AS SENSOR INPUT		SAME AS SENSOR INPUT
ISOLATION	300 V		NOTE 1
CONFIGURABLE AS ALARM	NO		NO

NOTE 1: 150 V effective isolation when using Seametrics micropower sensors. • NOTE 2: With 2000 ohm or lower pull-up resistance.

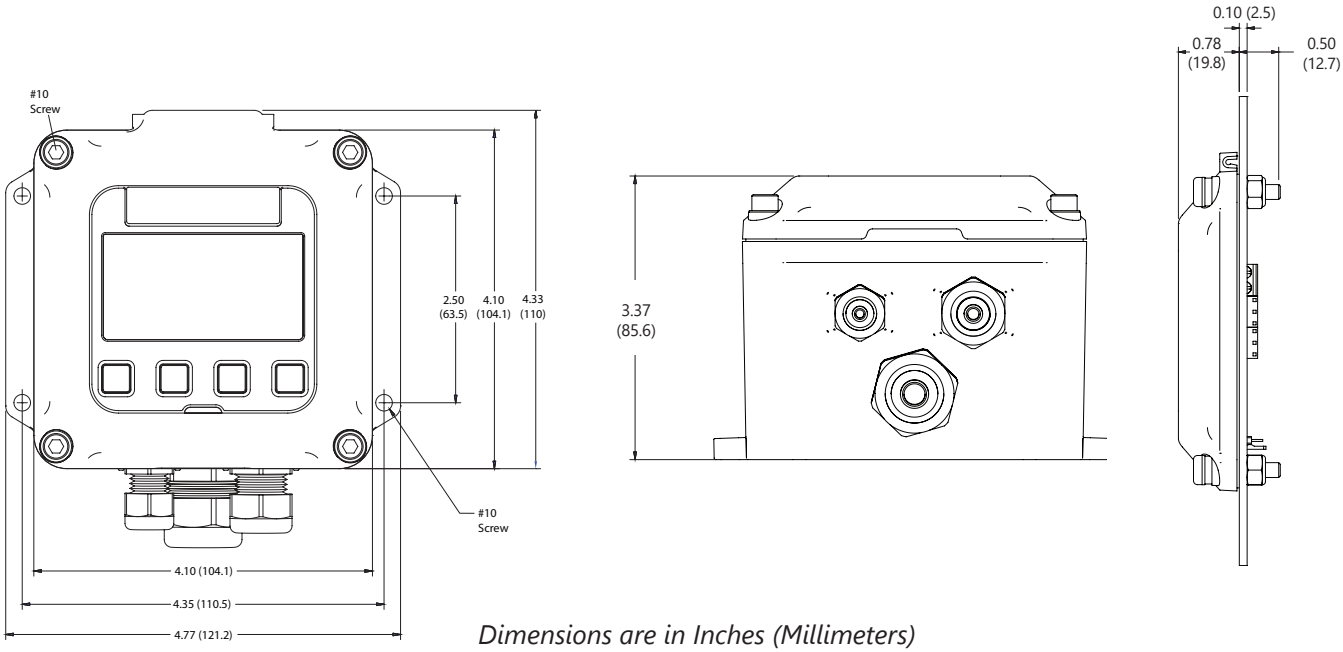

Dimensions are in Inches (Millimeters)

Wall Mount. To mount an FT430/440/450 indicator to the wall, hold the unit in the desired position, mark the holes in the mounting feet, drill and mount with screws. A meter-mounted indicator can be converted to a wall mount using an adapter mounting kit. Contact distributor for information.

Wall mount housings for FT units are supplied with 3 cord grips of different sizes. Be sure to use the appropriate sized cord grip for your cable or cables and to assure any unused cord grips are well sealed with a properly sized plug (these plugs will come in the cord grips that are supplied with the wall mount housing when shipped from the factory.) There will be a properly sized cord grip for any cable supplied by Seametrics.

Meter Mount. If the FT430/440/450 indicator was ordered as a meter mount model, the housing is already mounted directly to the flow sensor and needs no further installation.

An FT430/440 module can be converted from a wall-mount to an IP meter-mount unit using the mounting kit (contact distributor) that includes a lower housing and associated hardware and installs as follows:

1. Remove the strain relief through which the flow sensor cable runs.
2. Cut the cable to about 6" in length. Carefully strip the cable jacket to expose the three colored wires (red, white, and black) inside.
3. Route the wires through the threaded connector pre-installed in the bottom of the housing.
4. Start the threaded connector into the female thread on the top of the flow sensor. Be sure to match the oblong shape on the bottom of the housing to the depression on the top of the flow sensor.
5. Using an ordinary screwdriver inserted in one side of the slot (see drawing), tighten the screw as much as possible.
6. Strip the wire ends, make the connections to the indicator as shown in Connections Diagrams, and then use the cover screws to attach the indicator to the top of the housing.

Meter Mount

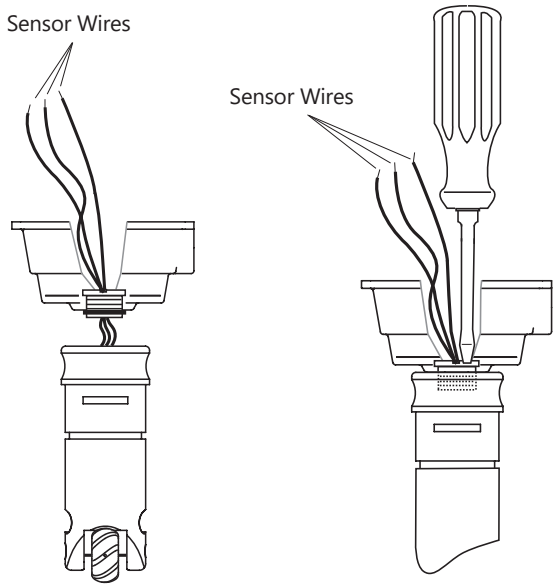

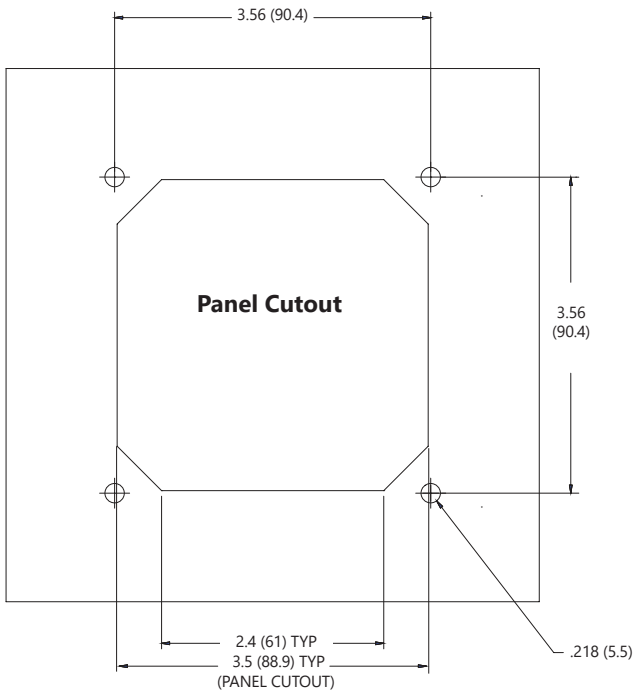

Panel Mount. Using the "Panel Cutout" drawing as a guide, cut a hole in the panel. Place the FT430/440 indicator on the panel and mark the holes, drill, and mount with the supplied screws and washers.

Connections. To connect the flow computer to a flow sensor or an external device such as a chemical metering pump, follow the Standard Connections diagrams on the following pages.

Environmental protection. Anytime an FT unit, or other meter is opened or otherwise exposed to the surrounding environment it is the responsibility of the installer to assure the housing is left clean, dry, fully sealed and otherwise protected from the surroundings. Moisture and dirt will damage electronics and care must be taken to keep the electronics housings clean and dry.

When installing, or re-installing any FT, or other housing cover to any enclosure be certain the gasket is in good condition, is clean and has not been damaged in any way. Then be certain to snugly torque the fastener(s) so the gasket is well sealed.

Every threaded opening in any meter housing will either be filled with a plug or a cord grip when the unit leaves the factory. If a plug is removed to allow for a cable to be installed, be certain a cord grip with cable gland is installed in its place and that the thread is sealed with a thread sealant or proper O-ring. Bare plastic threads in a metal housing are not sufficient and will cause atmospheric moisture to be sucked into the housing due to varying atmospheric pressure.

Cord Grips. Cord grips supplied by Seametrics are properly sized for the openings and threads in our meters and housings and are properly sized for cables offered by Seametrics. Cord grips must be well sealed into their housings and must be well sealed onto any cable that is installed through that cord grip. The compression nut for every cord grip must be left installed on the cord grip and must be snugly tightened on the cable or on a plug that would take the place of the cable. Plugs with flanges are to be installed from the outside of the compression nut to assure that the tapered features inside the nut can properly compress the cable gland when tightened

Wall Mount Housings. Wall mount housings for FT units are supplied with 3 cord grips of different sizes. Be sure to use the appropriate sized cord grip for your cable or cables and to assure any unused cord grips are well sealed with a properly sized plug (these plugs will come in the cord grips that are supplied with the wall mount housing when shipped from the factory.) There will be a properly sized cord grip for any cable supplied by Seametrics.

Cables. We recommend the use of cables that are supplied by Seametrics. If other cables are used the outside of the cable must be round and smooth so the cord grip can properly seal the cable.

Keep in mind that most cables are not sealed on the inside and a cable that is well sealed to a housing but left open on the weather end is just a conduit for moisture and changes in atmospheric pressure will cause, over time, moisture to be drawn into the housing through any exposed cable end, causing failure of your electronics.

FT450 Standard Connections

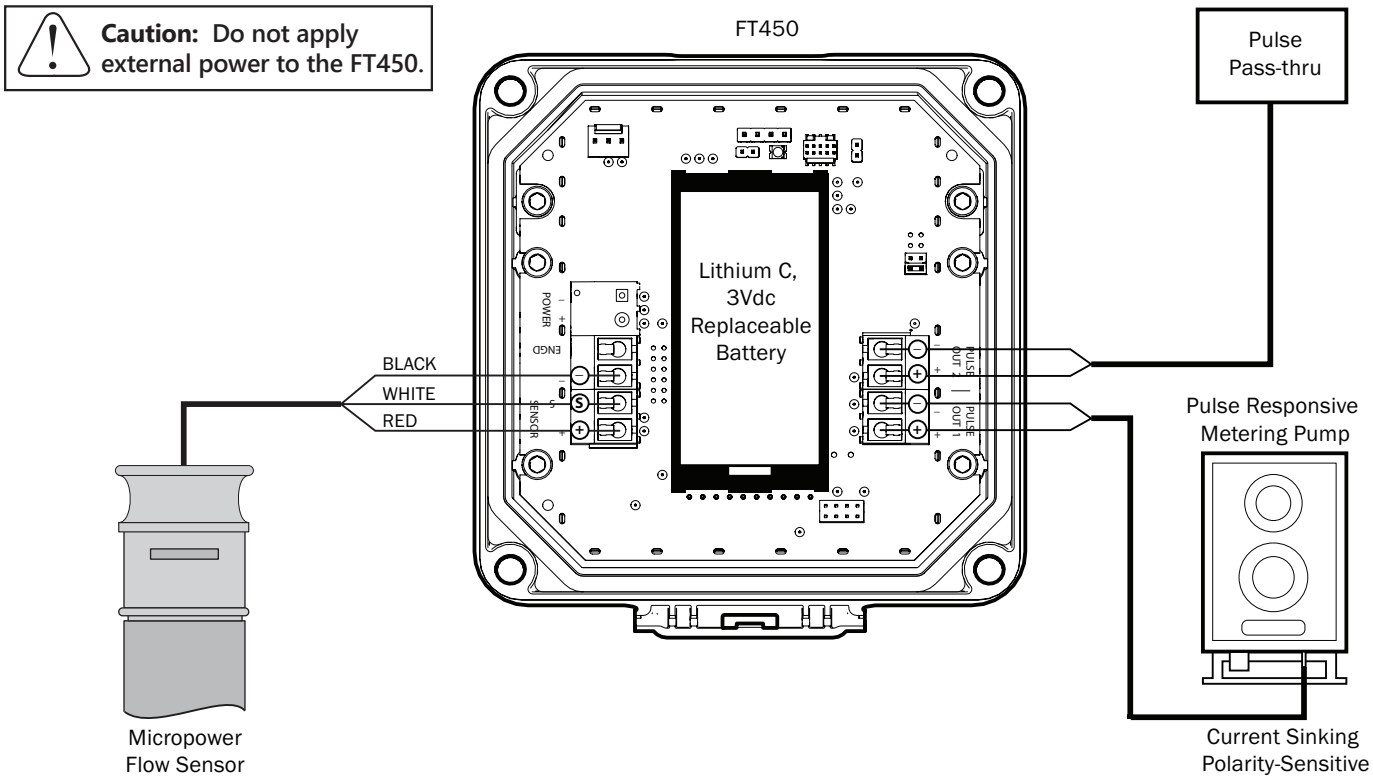

Connections for FT430/3-Wire Mechanical Meter

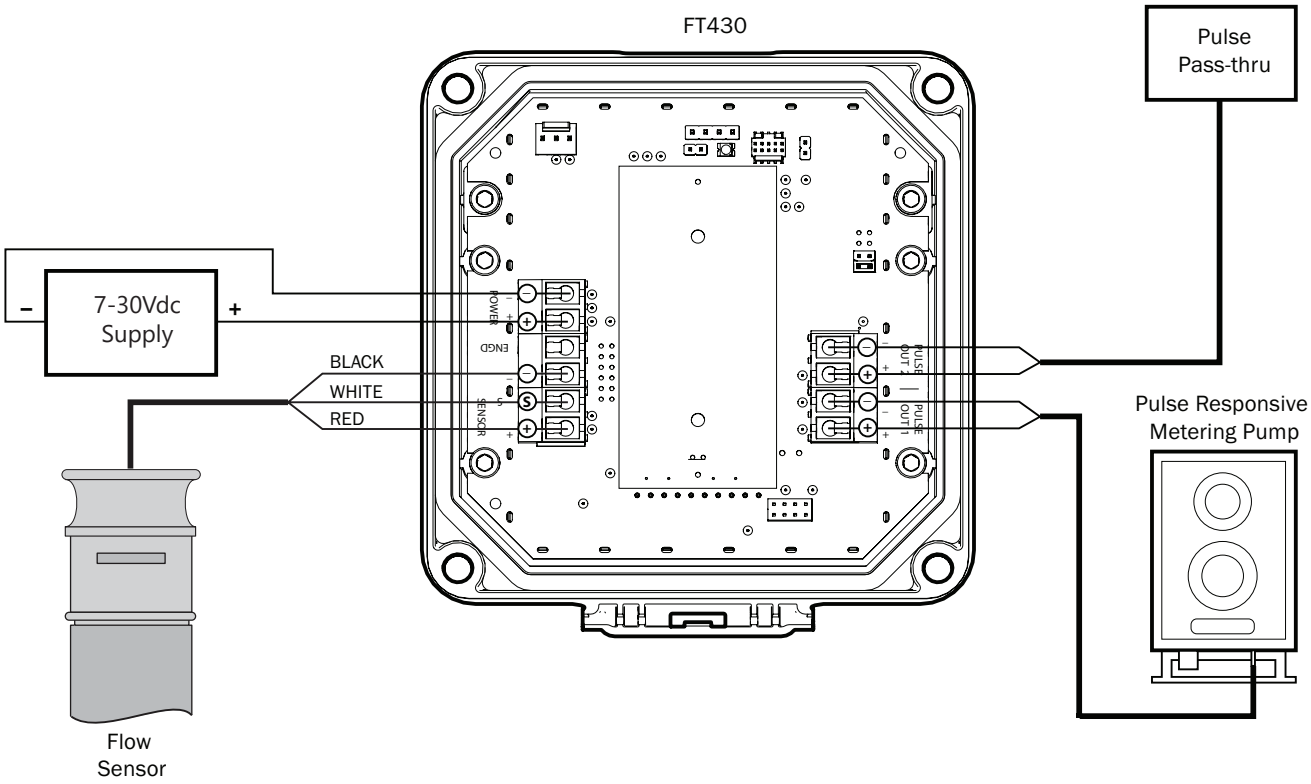

Connections for FT430-139 or FT440-139—115Vac Option

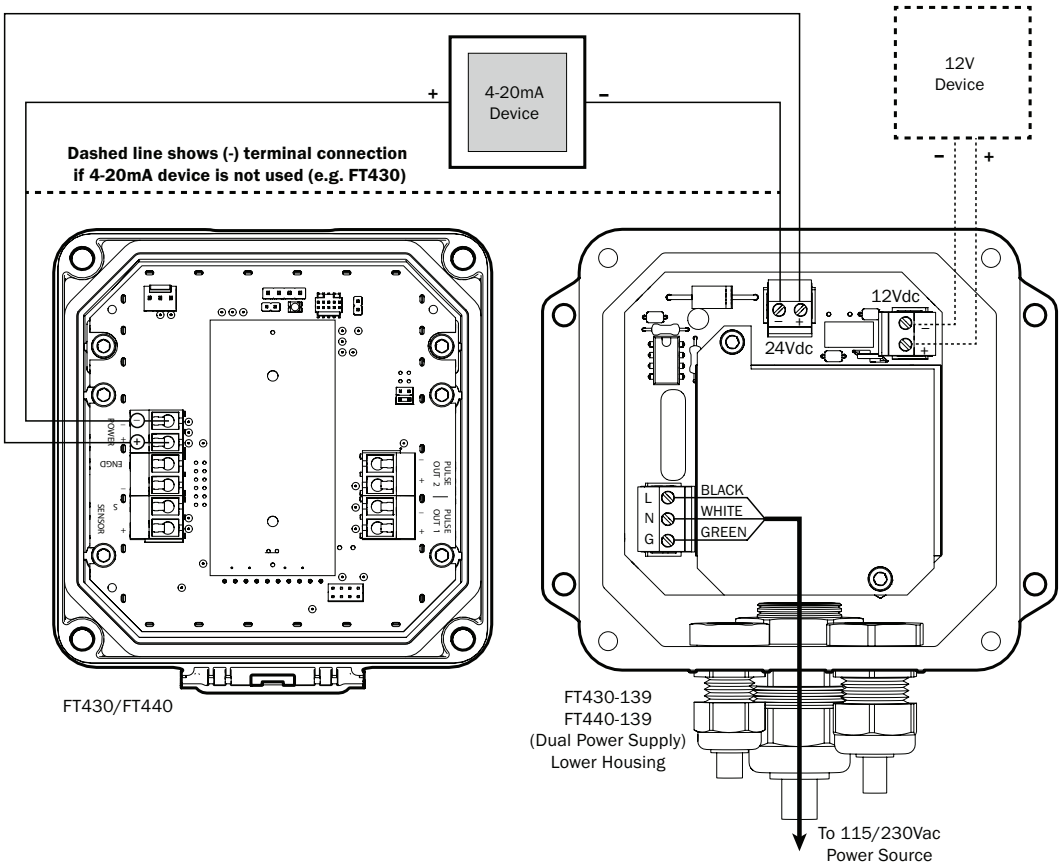

Connections for FT440/3-wire Mechanical/ Dual Scaled Pulse Out

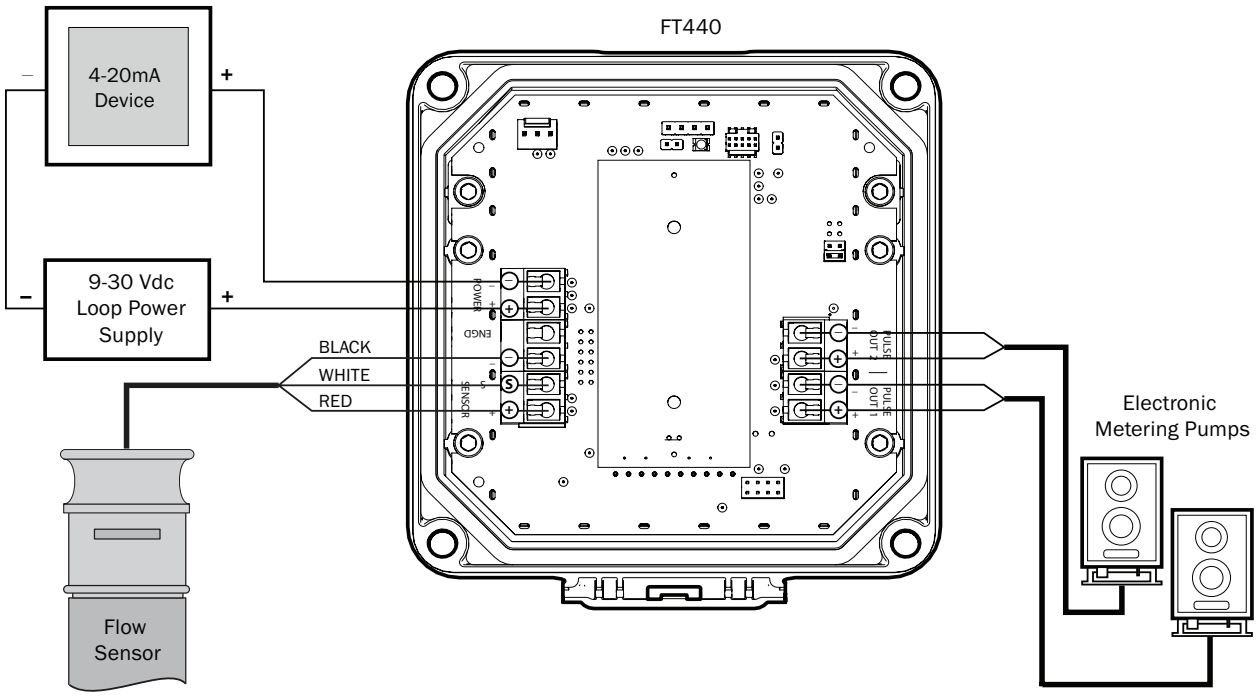

Connections for FT440/EX Magmeter

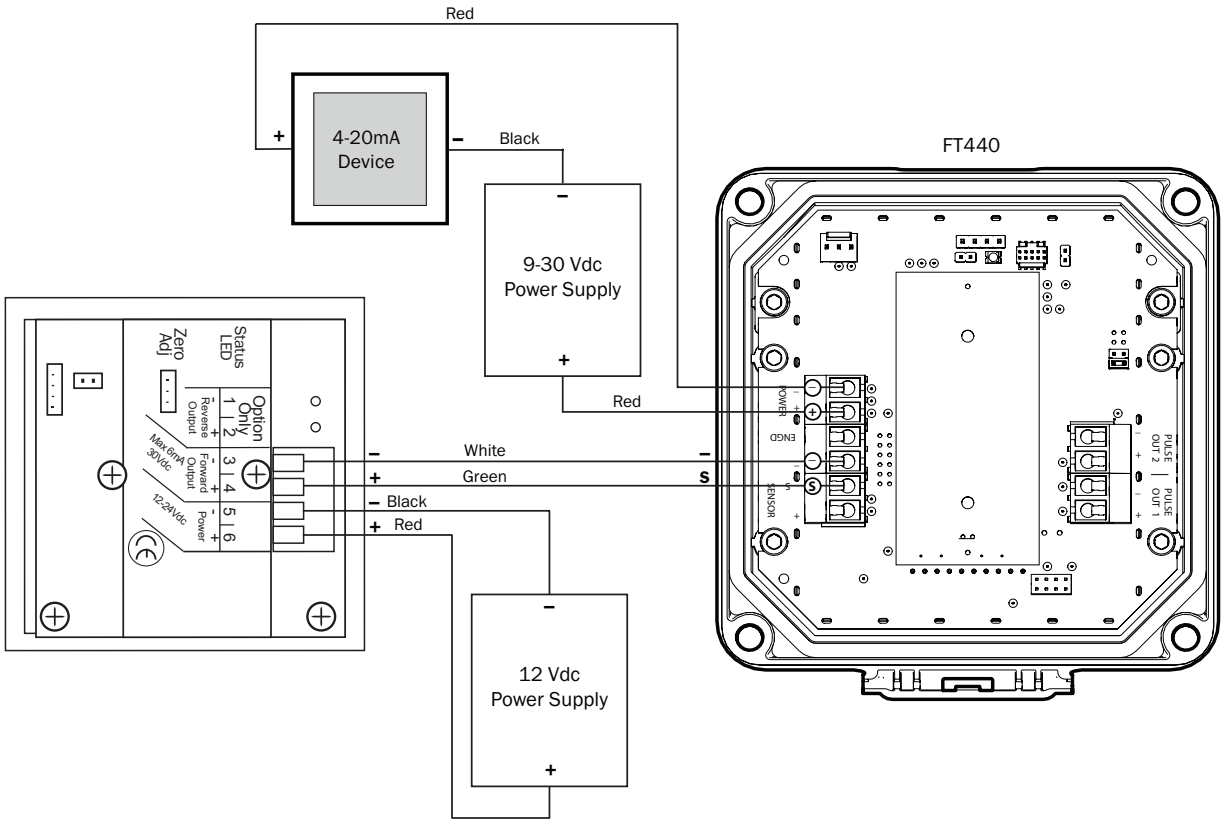

Connections for FT440-139/EX Magmeter

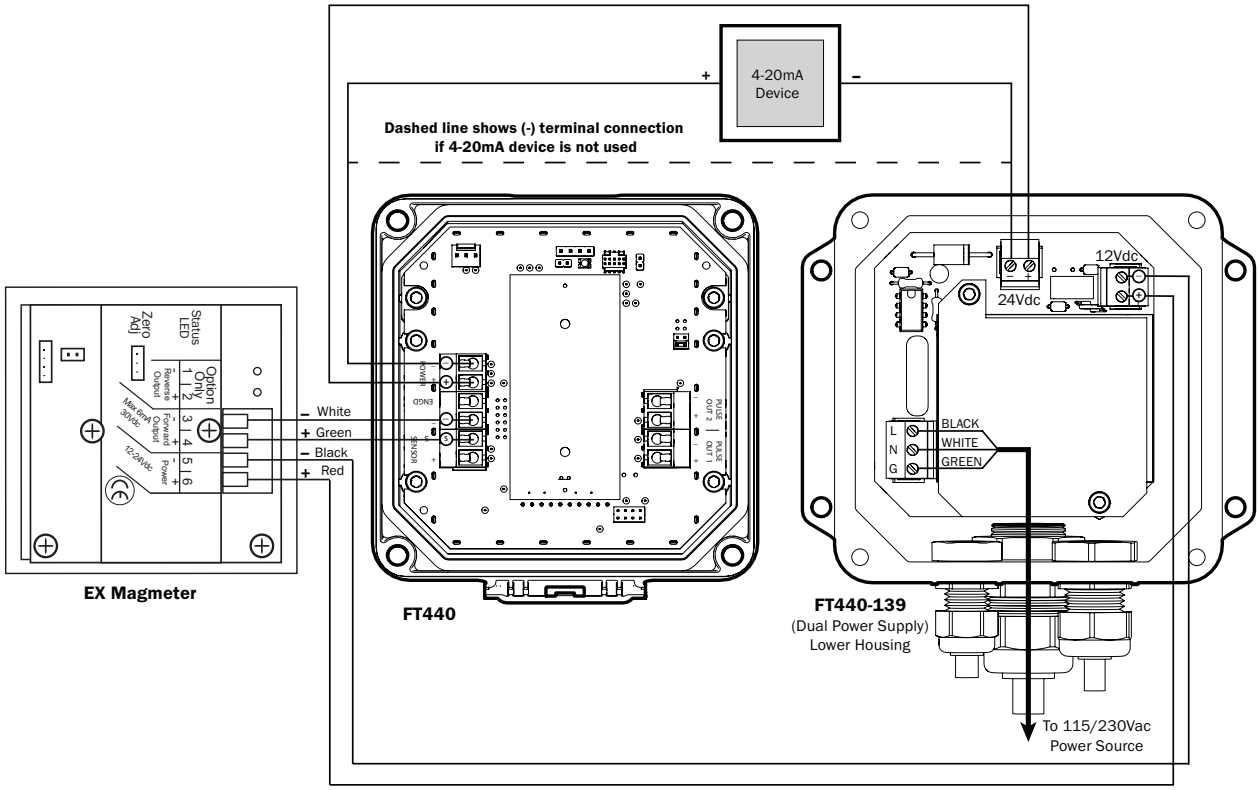

K-Factor

At a minimum, every FT430/440/450 flow computer must be programmed with the "K-factor". (This is the number of pulses that the meter produces per gallon of flow.) If you wish to read in units other than gallons, see below.

The K-factor on any Seametrics flow sensor fitting or in-line meter can be found on the model-serial label. The line reading K = xxxx gives the desired number. For depth-adjustable sensors (110, 210, 150, 250 models), use the calculator on our website.

Note: The K-factor on all FT430/440/450 flow computers is expressed in *pulses per gallon* of flow regardless of rate or total units.

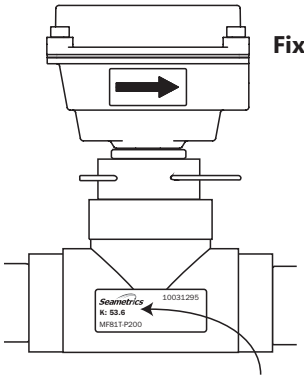

Changing Flow Indicator Settings

THE HOME SCREEN

The HOME Screen, shown above, is the normal screen which displays TOTAL flow volume and flow RATE. The Four buttons below the LCD display are used to access menu screens for viewing and changing setup parameters.

Menu Navigation

The left/right keys are used to move through the menus and position the cursor during data entry. The up arrow is used to scroll through the available values that are to be entered. (examples: numerical values for K factor entry or selection of units from the available options) The enter key (represented on the keypad by the check mark) is used to save selected entries and in conjunction with the exit tab to move between menu screens. As one navigates the menus the current parameter setting is shown and instructions are displayed for how to change the selected parameter.

MAIN MENU

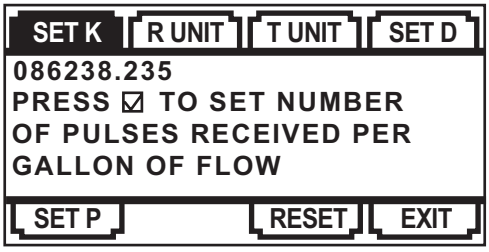

All menu screens consist of two rows of tabs surrounding a dialog box that lets you view and change setup parameters.

SET K

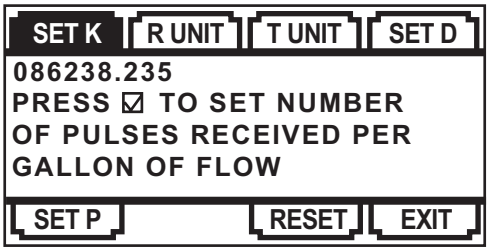

View or change the K factor. The K factor is the number of pulses the flow sensor provides for every gallon of flow. (Note that the decimal is fixed at three places. If you only have two decimal places for your K-factor, enter a zero for the third digit. If unable to set K-factor, the unit is "locked" to prevent tampering. Please contact your distributor for assistance.)

R UNIT

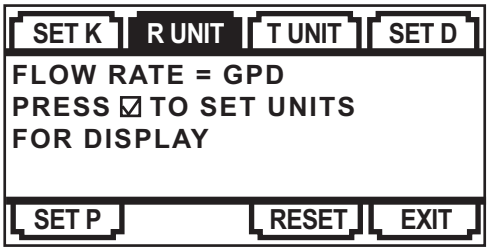

View or change the flow rate units

T UNIT

SET K | R UNIT | T UNIT | SET D
TOTAL = GALLONS
PRESS ☑ TO SET UNITS
FOR DISPLAY
SET P | RESET | EXIT

View or change the total volume units

SET D

SET K | R UNIT | T UNIT | SET D
000
PRESS ☑ TO CHOOSE
NUMBER OF DECIMAL PLACES
IN TOTAL DISPLAY
SET P | RESET | EXIT

View or change the number of decimals displayed in the total volume display

SET P OR SET A

SET K | R UNIT | T UNIT | SET D
00000.0 GALLONS
PRESS ☑ TO SET NUMBER OF
GALLONS TOTALIZED PER
PULSE SENT OUT PULSE1
SET P | RESET | EXIT

The factory setting will show Set P which allows one to view or change the volume of flow totalized per pulse sent to pulse out 1. The units for Set P follow the units selected for the rate display. *(With EXIT highlighted, pressing the up arrow four times will access the secondary menu. The P/A tab in the secondary menu will allow pulse out 1 to be an alarm. The alarm can be set to trigger on either a high or low flow condition as determined by the user.)*

SET P

Because the scaled pulse output is set by the user, be certain to choose a Set P value that provides reasonable resolution while not exceeding the maximum allowable input frequency of the receiving device or the 6.8 Hz maximum output frequency of the FT unit.

K-factor: Remember that Set P is expressed in units totaled per output pulse (G/P if using gallons) while K-factors are expressed in pulses per gallon (P/G). To determine K-factor from Set P, divide 1 by Set P (if Set P is expressed in gallons). Conversely, 1 divided by K-factor equals Set P.

Rate/minute displayed on FT	Pulse Output in Hz			
	SETP = 0.1	SETP = 0.5	SETP = 1.0	SETP = 10.0
10	1.6 Hz	.33 Hz	.16 Hz	.016 Hz
60		2 Hz	1 Hz	.1 Hz
100		3.33 Hz	1.66 Hz	.16 Hz
600				1 Hz
1000				1.6 Hz
K-factor	10	2	1	0.1

Note: The blacked-out values are beyond the 6.8 Hz maximum output frequency and will not properly output a scaled pulse. The minimum Set P value can be calculated as follows:
*Max Flow Rate (**in units per second**) / 6.8 Hz = Minimum Set P*

SET 20 (FT440 ONLY)

SET K | R UNIT | T UNIT | SET D
00000.0 GALLONS
PRESS ☑ TO SET THE FLOW
RATE AT WHICH 20 mA
(MAX) OUTPUT IS DESIRED
SET P | SET 20 | RESET | EXIT

Input the flow rate at which 20 mA (max) output is desired

RESET

SET K | R UNIT | T UNIT | SET D
PRESS ☑ TO RESET TOTAL
SET P | RESET | EXIT

Reset the total flow volume to zero. This tab is not available when the -64 non resettable total option is ordered

EXIT

SET K | R UNIT | T UNIT | SET D
PRESS ☑ TO EXIT MENU AND
RETURN TO FLOW DISPLAY
SET P | RESET | EXIT

Return to the home screen, enter a submenu, or accept a parameter change

The Exit menu also allows access to the secondary menu, as described on the next page.

Secondary Menu Functions

A secondary menu is available with further options. Enter the secondary menu by pressing the up arrow four times while EXIT is highlighted.

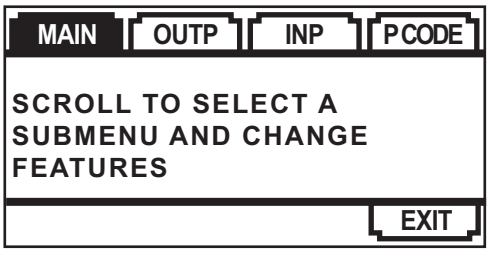

OUTP

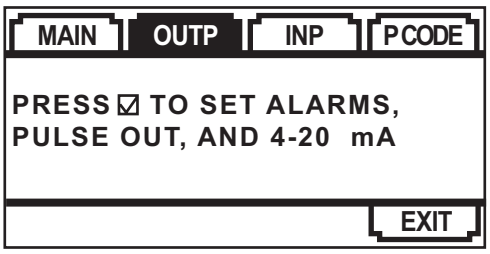

View or change the function of Out P tab on the main menu.

The FT440 has two available alarm outputs while the FT430 and FT450 only have one. The P/A tab changes the function of the scaled pulse outputs. Default is scaled pulse. Any scaled pulse output can be changed to alarm high or alarm low. If alarm options are selected menu tabs for setting the alarms will be displayed on the main menu (alarm 1) or the secondary menu (alarm 2) If the alarm options are selected a Set H (hysteresis) tab is available. The hysteresis entry is a % value. The value defines the % change required for a change in alarm state to occur.

The factory setting will show Set P2 (FT440 only) which allows one to view or change the volume of flow totalized per pulse sent to pulse out 2. The units for Set P2 follow the units selected for the rate display. If P2 is selected as an alarm the menus will change to Set A2 and a Set H (hysteresis) tab is available. The hysteresis entry is a % value. The value defines the % change required for a change in alarm state to occur.

Set 4 (FT440 only) input the flow rate at which 4 mA (min) output is desired.

ADJ L (FT440 only) allows the adjustment of the 4 mA and 20 mA values so that one can tune performance of the FT440 to match the installed system values. The adjustment units range from 0-32. Positive values adjust the setting incrementally larger and negative values adjust the setting incrementally lower.

INP

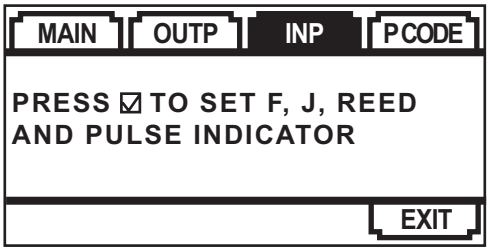

View or change the filter (set F), jitter (set J), enable reed mode and enable BURST mode. Use the filter setting if the display is jumping excessively due to flow conditions. Use the jitter setting to enter a time delay to handle start up conditions. Jitter units are seconds. Turn the BURST mode on if the input pulses to the FT unit are not delivered steadily across time but are delivered in groups or 'bursts' of pulses separated by moments of inactivity.

PCODE

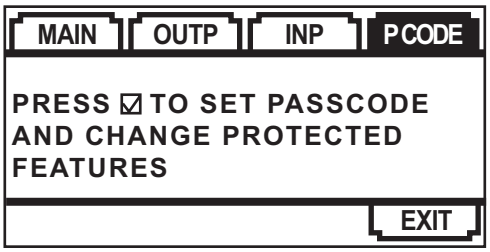

Enter the pass code for access to protected features.

Protected Features

To enter the protected features use the left/right arrow keys to navigate to the Pcode tab, found in the secondary menu. Press the enter key and then enter the pass code. The protected menu, shown below, will now be displayed. The tabs have the following functions:

Set CD	Enter a user created numerical pass code.
Lock	Lock menu functions to prevent unauthorized changes.
E/D R	Disable or enable the total volume reset function.
PCNT	Keeps a running tally of the number of times the pass code has been used.

To conserve battery life on battery powered units, the display screen goes to a blank screen after approximately 3 minutes of non-use. Push any button to reactivate display.

Problem	Probable Causes	Things to try...
Display blank	No power to the unit Short in sensor circuit Battery dead or loose (FT450 only) Display is in sleep mode	Check for minimum 12 Vdc at power terminals Disconnect sensor, see if display returns (zero flow rate) Wiggle battery, replace if over three years old Push any button to reactivate display. (Display goes to sleep after about 3 minutes of non-use)
Display jumps between 2 distinct values	Display filter (Set F) is set too low in BURST mode	Increase Set F to a higher value
Display missing pixels	Damaged display module	Contact distributor for return/replacement
Display showing meaningless characters	Unit's microcontroller crashed Battery nearly dead	Disconnect and reconnect power. If problem repeats, contact distributor for return/replacement Replace battery
Display reads normally but flow rate incorrect	Wrong K-factor or time base entered K-factor was not entered in pulses per gallon	Enter correct K-factor from meter, fitting, or manual Change K-factor to pulses per gallon
Display reads normally but flow rate is too high	Input pulses are being delivered in groups or bursts followed by moments of inactivity	Enable BURST mode.
Display reads normally but incorrect pulse output	Wrong pulse output setting Polarity reversed on pulse output terminals	Use "Set P" to correct pulse output setting Reverse leads
Display reads normally, but no (or incorrect) 4-20mA output (FT440 only)	Wrong 4mA setting or wrong 20mA setting Inadequate loop power supply voltage Polarity incorrect in 4-20mA loop circuit	Use "Set 4" to correct target minimum flow rate Use "Set 20" to correct target top flow rate Check voltage (For 4-20mA applications, 24 Vdc is recommended) Compare to Connections diagram
Display reads zero when there is flow	Flow sensor failed Break in flow sensor circuit Flow sensor not battery-compatible	Consult flow sensor manual for how to test Check for continuity with multimeter Check flow sensor model for "micropower option"
Display reads flow rate when there is none	Long flow sensor wire, running parallel to power wires Flow sensor malfunction Flow "jitter" (oscillating slosh) reads as flow	Reroute wire or change to shielded wire See flow sensor manual to check Consult factory for "anti-jitter" setting
Pulse output values are incorrect	External electrical noise disrupting output function	Tie commons together by adding a jumper between pulse out [-] and power [-] and/or EGND
Totalizer does not always appear to display the total flow	Break in power to meter	The totalizer's memory is only updated every 15 minutes. If power is lost, the totalizer will retain the value last written but will not be updated to reflect any flow between the last write and the time the power was lost

The limited warranty set forth below is given by Seametrics, with respect to Seametrics and INW brand products purchased in the United States of America.

Seametrics warrants that products manufactured by Seametrics, when delivered to you in new condition in their original containers and properly installed, shall be free from defects in material and workmanship. **Seametrics products are warranted against defects for a period of two (2) years from date of installation, with proof of install date. If no proof of install date can be provided, warranty period will be two (2) years from date of shipment from Seametrics, as defined on Seametrics' invoice.** Seametrics' obligation under this warranty shall be limited to replacing or repairing the part or parts, or, at Seametrics' option, the products, which prove defective in material or workmanship. The following are the terms of Seametrics' limited warranty:

a. Buyer must give Seametrics prompt notice of any defect or failure and satisfactory proof thereof.
b. Any defective part or parts must be returned to Seametrics' factory or to an authorized service center for inspection.
c. Buyer will prepay all freight charges to return any products to Seametrics' factory, or another repair facility. as designated by Seametrics.
d. Defective products, or parts thereof, which are returned to Seametrics and proved to be defective upon inspection, will be repaired to factory specifications.
e. Seametrics will deliver repaired products or replacements for defective products to the buyer (ground freight prepaid) to the destination provided in the original order.
f. Products returned to Seametrics for which Seametrics provides replacement under this warranty shall become the property of Seametrics.
g. This limited warranty covers all defects encountered in normal use of Seametrics products, and does not apply to the following cases:
    i. Loss of or damage to Seametrics product due to abuse, mishandling, or improper packaging by buyer
    ii. Failure to follow operating, maintenance, or environmental instructions prescribed in Seametrics' instruction manual
    iii. Products not used for their intended purpose
    iv. Alterations to the product, purposeful or accidental
    v. Electrical current fluctuations
    vi. Corrosion due to aggressive materials not approved for your specific product
    vii. Mishandling, or misapplication of Seametrics products
    viii. Products or parts that are typically consumed during normal operation
    ix. Use of parts or supplies (other than those sold by Seametrics) which cause damage to the products, or cause abnormally frequent service calls or service problems
h. A new warranty period shall not be established for repaired or replaced material, products, or supplied. Such items shall remain under warranty only for the remainder of the warranty period on the original materials, products, or supplies.
i. In the event that equipment is altered or repaired by the buyer without prior written approval by Seametrics, all warranties are void. Damage caused by equipment or accessories not manufactured by Seametrics may void the product's warranty.
j. SOFTWARE: The Seller grants the user a non-exclusive license to use Seametrics' software, according to the following limitations and conditions:
    i. The user may install the software on one or more desktop or laptop computers.
    ii. All title and intellectual rights to the software are owned by Seametrics.
    iii. No copies may be made or distributed except as described above.
    iv. The user may not modify or reverse-engineer the software.

THE FOREGOING WARRANTY IS IN LIEU OF ALL OTHER WARRANTIES, WHETHER ORAL, WRITTEN, EXPRESSED, IMPLIED OR STATUTORY. NO IMPLIED WARRANTY, INCLUDING ANY IMPLIED WARRANTY OF MERCHANTABILITY OR FITNESS FOR A PARTICULAR PURPOSE, APPLIED TO THE PRODUCTS AFTER THE APPLICABLE PERIOD OF THE EXPRESS LIMITED WARRANTY STATED ABOVE, AND NO OTHER EXPRESS WARRANTY OR GUARANTY, EXCEPT AS MENTIONED ABOVE, GIVEN BY ANY PERSON OR ENTITY WITH RESPECT TO THE PRODUCTS, SHALL BIND SEAMETRICS. SEAMETRICS SHALL NOT BE LIABLE FOR LOSS OF REVENUES, OR PROFITS, OR INCONVENIENCES, EXPENSE FOR SUBSTITUTE EQUIPMENT OR SERVICE, STORAGE CHARGES, LOSS OF DATA, OR ANY OTHER SPECIAL, INCIDENTAL, OR CONSEQUENTIAL DAMAGE CAUSED BY THE USE OR MISUSE OF, OR INABILITY TO USE THE PRODUCTS, REGARDLESS OF THE LEGAL THEORY ON WHICH THE CLAIM IS BASED, AND EVEN IF SEAMETRICS HAS BEEN ADVISED OF THE POSSIBILITY OF SUCH DAMAGES. IN NO EVENT SHALL RECOVERY OF ANY KIND AGAINST SEAMETRICS BE GREATER IN AMOUNT THAN THE PURCHASE PRICE OF THE PRODUCT SOLD BY SEAMETRICS AND CAUSING THE ALLEGED DAMAGE. WITHOUT LIMITING THE FOREGOING, YOU ASSUME ALL RISK OF LIABILITY FOR LOSS, DAMAGE, OR INJURY TO YOU AND YOUR PROPERTY AND TO OTHERS AND THEIR PROPERTY ARISING OUT OF USE OR MISUSE OF, OR INABILITY TO USE THE PRODUCTS NOT CAUSED DIRECTLY BY THE NEGLIGENCE OF SEAMETRICS.

SOME STATES DO NOT ALLOW LIMITATIONS ON THE DURATION OF AN IMPLIED WARRANTY, SO THE ABOVE LIMITATIONS MAY NOT APPLY TO YOU. SIMILARLY, SOME STATES DO NOT ALLOW THE EXCLUSION OR LIMITATIONS OF CONSEQUENTIAL DAMAGE, SO THE ABOVE LIMITATION OR EXCLUSION MAY NOT APPLY TO YOU. THIS LIMITED WARRANTY GIVES YOU SPECIFIC LEGAL RIGHTS; HOWEVER, YOU MAY ALSO HAVE OTHER RIGHTS WHICH MAY VARY FROM STATE TO STATE.

Seametrics • 19026 72nd Avenue South • Kent, Washington 98032 • USA
(P) 253.872.0284 • (F) 253.872.0285 • 1.800.975.8153 • seametrics.com

LT-14235r3.2 20190218
2/18/2019