AG90-SERIES

ELECTROMAGNETIC INSERTION FLOW METER

Seametrics
Precision Flow Measurement
An ONICON Brand

APPLICATIONS

Irrigation
Agricultural automation
Reuse/Reclaim water
Surface water
Fertigation/Chemigation
Well usage monitoring
Propeller meter replacement

Features

- Direct replacement for propeller meter
- No moving parts to rebuild
- Less pipe obstruction
- Durable
- Easy to install
- No routine maintenance
- Pulse Output Standard
- 4 year battery life

The **AG90-series** battery powered, insertion electromagnetic flow meter is designed for use with conductive fluids in 4"–12" pipe. The AG90's stainless steel body allows the meter to operate in a wide range of temperatures, pressure, and corrosive or dirty environments.

The AG90 is highly suitable for difficult applications. With no moving parts, over-run conditions will not degrade the life of the AG90. It is resistant to wear from debris found in surface or ground water and there are no bearings to wear out or propellers to damage.

Rate and total units can be set via the front panel touch key pad by the user. Bidirectional flow is standard with totals available in forward, reverse, net, batch forward and batch reverse.

The AG90 is battery powered and an output cable is available for transmitting the pulse signal to remote devices. The AG90 includes a Seametrics saddle which has been designed to accommodate a wide range of pipe sizes and types while ensuring correct placement in the pipe. In addition, an optional internal data logger allows local storage of flow history.

Contact Your Supplier

5-YEAR WARRANTY
Seametrics
5
LONGEST IN THE IRRIGATION INDUSTRY

ISO 9001

PROUDLY MADE IN THE USA

Free battery replacement at year four with warranty registration!

AG90-SERIES
ELECTROMAGNETIC INSERTION FLOW SENSOR

Specifications*

Pipe Size		4″ to 12″			
Materials	**Sensor Body**	316 SS			
	Electrodes	Hastelloy			
	Housing	Powder-coated diecast aluminum			
	Electrode Cap	PVDF (Kynar®)			
	O-Ring	EPDM			
Temperature	**Operating**	10˚ to 140˚ F (-12˚ to 60˚ C)			
	Storage	-40˚ to 158˚ F (-40˚ to 70˚ C)			
	Fluid Temp.	32˚ to 200˚ F (0˚ to 93˚ C)			
Pressure		200 psi (14 bar)			
Flow Rate		0.5 - 4.5 m/sec (1.64 - 14.8 ft/sec) (Low flow cutoff .15 m/sec; .49 ft/sec)			
Calibration Accuracy	**0.5 - 4.5 m/s (1.64-14.76 ft/sec)**	+/- 2% of reading			
	0.3 - 0.5 m/sec (0.98 - 1.64 ft/sec)	+/- (2% of reading + 0.25% of full scale)			
Display	**Type**	128x64 dot-matrix LCD			
	Digits	5 Digit Rate		8 Digit Total	
	Units	Rate Volume Units	Rate Time Units	Total Volume Units	
	Please Note: All meters are factory set for gallons per minute (GPM) rate and acre foot total. If other units are required, they can be set in the field.	Gallons Liters Barrels (42 gallons) Cubic Feet Cubic Meters Million Gallons[1] Mega Liters[1] Imperial Gallons Million Imperial Gallons[1]	Second Minute Hour Day	Gallons Gallons x 10 Gallons x 100 Gallons x 1000 Million Gallons Liters Kilo Liters Mega Liters Barrels (42 gallons) Cubic Meters	Cubic Meters x 1000 Cubic Feet Cubic Feet x 1000 Million Cubic Feet Imperial Gallons Imperial Gallons x 1000 Million Imperial Gallons Acre Inch Acre Foot Fluid Ounce
	Bidirectional	Forward Total, Reverse Total, Net Total, Batch Forward, Batch Reverse			
Power		One lithium 7.2V 'D' size battery pack, replaceable.			
Scaled Pulse Output	**Signal**	Current sinking pulse, isolated, 36 Vdc at 10 mA max			
	Pulse Rates	User-scalable from 0.1 to 99,999.9 volume units/pulse. Pulse width varies with output frequency, 150 pulses/sec max			
Cable	**Optional Output Cable**	20ft (6m) standard length polyurethane jacketed cable—for power and outputs. (Lengths up to 200' (60 m) available.)			
Conductivity		>20 microSiemens/cm			
Empty Pipe Detection		Hardware/software, conductivity-based			
Regulatory		CE (EN 61326) Pending			
Environmental		IP67			

* *Specifications subject to change. Please consult our website for the most current data (seametrics.com).*
[1] *Rate Time Unit is available in Day only.*
Kynar is a registered trademark of Arkema, Inc.

Flow Range*

Nominal Pipe Size	4″	6″	8″	10″	12″
Low Flow Cutoff GPM	19.3	43.11	77.1	120.5	173.5
Low Flow Cutoff LPS	1.22	2.72	4.86	7.6	10.95
Min GPM	64.3	144.6	257	401.6	578.3
Min LPS	4.1	9.1	16.2	25.3	36.5
Max GPM	578	1301	2313	3614	5204
Max LPS	36.5	82.1	145.9	228	328.3

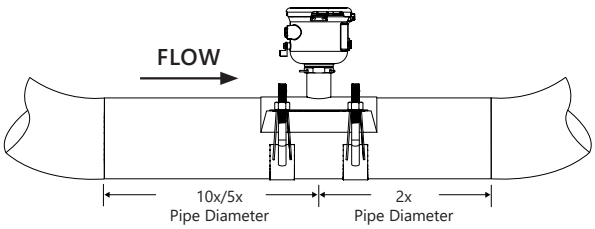

Upstream straight pipe is selected during initial setup. Upstream options are 5X or 10X the diameter and are based on the amount of straight pipe available in either new or propeller meter replacement installation. Downstream straight pipe requirement is 2X the diameter. See programming setup for details.

AG90-SERIES
ELECTROMAGNETIC INSERTION FLOW SENSOR

Features

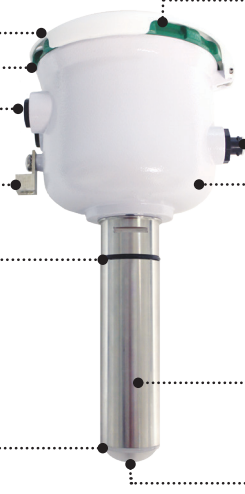

- Battery Powered
- Bidirectional Flow Reading
- Pulse Scaled Output
- Built-in Data Logger *(Optional)*

Quickly and easily change Total Volume Units, Flow Rate Units, Pulse Output Scaling, and many other settings using the two light sensor button controls on the display panel.

Saddle Included

Dimensions

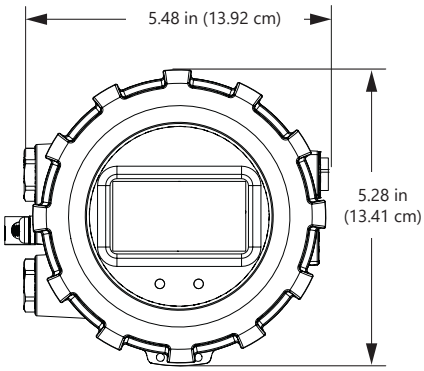

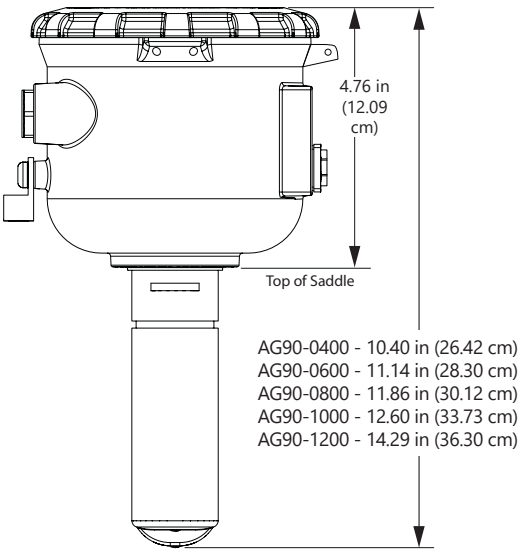

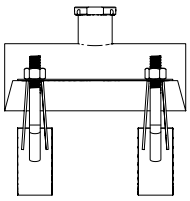

Each saddle has a range of actual pipe size O.D. that it will work with. When you order your meter, you will specify the nominal pipe size and the saddle provided will work with the following actual pipe O.D.

Saddle Size	Range
4″	4.00″- 4.90″
6″	6.00″- 6.90″
8″	8.00″ - 9.05″
10″	10.40″ - 11.10″
12″	12.10″ - 13.20″

Consult factory if your OD does not match.

AG90-SERIES
ELECTROMAGNETIC INSERTION FLOW SENSOR

How to Order Worksheet

	1	2	3	4	5
AG90	☐☐☐☐	☐☐	☐	☐☐	☐☐☐☐

2 **Power:** BX = Battery

3 **Outputs:** X = No optional output

1 Size	2 Power	3 Optional Output *(Comes standard with one pulse output)*	4 Options	5 Power/Output Cable *(Must select one)*
-0400 4″ -0600 6″ -0800 8″ -1000 10″ -1200 12″	-BX	-X *(requires single cable for pulse output)*	-XX None -01 Data Logger	-0000 No Cable *(customer will supply)* -006S 6 meter (20 ft) -015S 15 meter (50 ft) -030S 30 meter (100 ft) -045S 45 meter (150 ft) -060S 60 meter (200 ft)

Note: All meters are factory set for gallons per minute (GPM) rate and acre foot total. If other units are required, they can be programmed in the field.

Note2: Saddle included with meter

Note3: The AG90 can be externally powered by connecting DC power with the power/output cable. Batteries then serve as backup power.

For chemical or fertilizer injection applications, the injection point must be placed downstream of the meter or far enough upstream for complete mixing to occur before the flow reaches the meter. (See fertigation technical bulletin on Seametrics website, seametrics.com.)

Easy Propeller Meter Replacement Installation

Easy New Installation

Seametrics • 19026 72nd Avenue South • Kent, Washington 98032 • USA
(P) 253.872.0284 • (F) 253.872.0285 • 1.800.975.8153 • seametrics.com

LT-14495r1.7 20190429
4/29/2019