AG3000

Irrigation Magmeter Instructions

Seametrics
Precision Flow Measurement
An ONICON Brand

5-YEAR WARRANTY
Seametrics
5
LONGEST IN THE IRRIGATION INDUSTRY

Free battery replacement at year five with warranty registration!

General Information

General Information ..... Page 3
Features ..... Page 3
Specifications ..... Page 4
Dimensions ..... Page 5
Accuracy ..... Page 6
Flow Rate ..... Page 6

Installation

Straight Pipe Recommendations ..... Page 7
Full Pipe Recommendations ..... Page 8
Positioning the Meter ..... Page 9
Installing Gaskets ..... Page 9
Tightening Flange Bolts ..... Page 10
Equalization and Grounding (Metal and Plastic Pipe) ..... Page 10

Connections

General Cable Information ..... Page 11
Cable Gland Opening and Sealing ..... Page 11
Cable Installation ..... Page 12
Wiring Diagrams ..... Page 13
Cable Wiring Table ..... Page 15

Configuration

Sourcing Mode Output Application ..... Page 16
Sinking Mode Output Application ..... Page 16
Analog (4-20mA Current Loop) Output Application ..... Page 16
Cable Shield ..... Page 17
Pulse Output ..... Page 17
Analog (4-20mA) Output ..... Page 18
HART Output ..... Page 18
Modbus Output ..... Page 18
Digital Output ..... Page 18

Operation

Changing Flow Meter Settings - Home Screen and General Navigation ..... Page 19
Changing Flow Meter Settings - Changing Total Direction/Resetting Totalizers ..... Page 19
Changing Flow Meter Settings - Entering Menu System ..... Page 19
Changing Flow Meter Settings - Making Selections ..... Page 19
Changing Flow Meter Settings - Standard Menu Options ..... Page 20
Changing Flow Meter Settings - Special Submenu ..... Page 20
To Change a Passcode ..... Page 21
Power Indicators ..... Page 21
Battery Powered Units ..... Page 22

Troubleshooting & Error Messages

Problem ..... Page 23
Probable Cause ..... Page 23
Things to Try ..... Page 23
Error Messages ..... Page 23

Warranty

Seametrics Limited Warranty ..... Back

Note: These instructions cover the AG3000. For details on the AG3000p or AG3000r, see the *AG3000p & AG3000r Irrigation Magmeter Instructions*.

The **AG3000 Series** is a spool-type electromagnetic flowmeter for use in irrigation applications in 3" to 12" pipe. With no moving parts, these meters provide unobstructed flow and are resistant to wear from debris found in ground or surface water. Little maintenance is required because there are no bearings to wear out or propellers to stop turning. Minimal straight pipe requirements allow AG3000 meters to be used in piping configurations where there is little space between the meter and an elbow.

The standard AG3000 is battery powered with an available pulse output. Both rate and total indication show on the meter mounted display. Bidirectional flow reading is standard with totals available in forward, reverse, net flow, batch forward flow, and batch reverse flow. Batch totals can be reset. Built-in data logging is available as an option for secure flow logging.

The AG3000 is also available with external DC power. With an externally powered AG3000 an additional output can be added, such as 4-20mA, HART, Modbus®, or high speed digital.

The AG3000 Series is CE certified and IP68 for burial, or applications where the meter may be under water for prolonged periods of time. All meters are provided with a security seal to protect against unauthorized access. The seal can be broken by an authorized agent to replace the battery pack or field install a power/output cable. The cable is field installed where external power is available and/or an output is needed.

Features

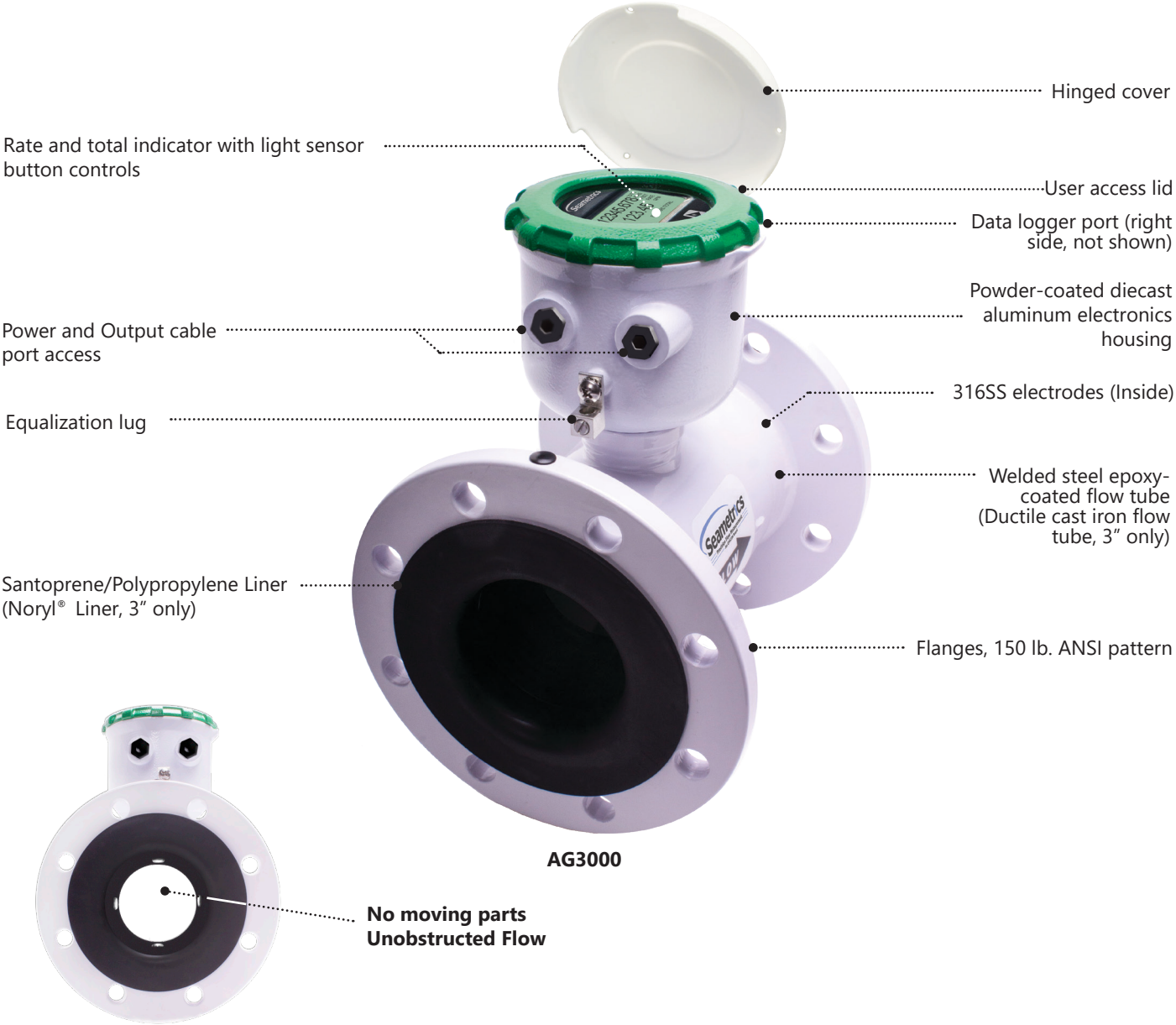

Specifications*

Pipe Sizes		3", 4", 6", 8", 10", 12"
Flanges		150 lb. ANSI Pattern
Pressure		150 psi (10.3 bar) line pressure
Temperature	**Operating**	10˚ to 140˚ F (-12˚ to 60˚ C)
	Storage	-40˚ to 158˚ F (-40˚ to 70˚ C)
Accuracy		±0.75% of reading on AG3000p and AG3000r (±1.0% AG3000), ±0.025% of full-scale flow from low flow cutoff to maximum flow rate of 10 m/sec
Low Flow Cutoff		0.5% of maximum flow rate
Material	**Body** *(3" only)*	Ductile cast iron, powder coated
	Body *(4"-12")*	Welded steel, epoxy-coated
	Liner *(3" only)*	Noryl®
	Liner *(4"-12")*	Santoprene flange/Polypropylene liner body
	Electronics Housing	Powder-coated diecast aluminum
	Electrodes	316 stainless steel
	O-ring (3" only)	EPDM
Display	**Type**	128x64 dot-matrix LCD
	Digits	5 Digit Rate / 8 Digit Total
	Units	Rate Volume Units / Rate Time Units / Total Volume Units
	Please Note: All AG3000 meters are factory set for gallons per minute (GPM) rate and acre feet total. If other units are required, they can be set in the field.	Rate Volume Units: Gallons, Liters, Barrels(42 gal), Cubic Feet, Cubic Meters, Million Gallons[2], Mega Liters[2], Imperial Gallons, Million Imperial Gallons[2] Rate Time Units: Second, Minute, Hour, Day Total Volume Units: Gallons, Gallons x 10, Gallons x 100, Gallons x 1000, Million Gallons, Liters, Kilo Liters, Mega Liters, Barrels (42 gal), Cubic Meters, Cubic Meters x 1000, Cubic Feet, Cubic Feet x 1000, Second Foot Day, Million Cubic Feet, Acre Feet, Acre Inches, Imperial Gallons, Imperial Gallons x 1000, Million Imperial Gallons, Fluid Ounces
	Bidirectional[1]	Forward Total, Reverse Total, Net Total, Batch Forward Total, Batch Reverse Total (Batch totals can be reset)
Power	**DC Power**	9-36 Vdc @ 250 mA max, 30 mA average
	Battery Backup **(Not for use as primary power)**	DC powered units: Two lithium 3.6V 'D' batteries, replaceable. AC powered units: One 9V alkaline battery, replaceable.
	AC Power *(AG3000r and AG3000p only)*	85-264Vac, 50/60Hz, 0.12A
	Battery *(AG3000 only)*	One lithium 7.2V 'D' size battery pack, replaceable.
Scaled Pulse Output	**Signal**	Current sinking pulse, isolated, 36 Vdc at 10 mA max
	Pulse Rates	User-scalable from 0.1 to 99,999.9 volume units/pulse. Pulse width is one-half of pulse period with minimum pulse width of 2.5 ms, 200 pulses/sec max. For battery option meters, pulse width varies with frequency, 150 pulses/sec max.
Options	**4-20mA Current Loop**	Isolated, passive, 24Vdc, 650 Ω maximum current loop
	HART/4-20mA	HART protocol over 4-20mA line
	High Speed Digital Output *(AG3000 & AG3000p only)*	Isolated, open collector, 24 Vdc
	Serial Communications	Isolated, asynchronous serial RS485 (Reconfigurable for RS232 or 3.3V CMOS), Modbus® RTU protocol (factory selectable)
Cable	**Power/Output Cable**	20ft (6m) standard length polyurethane jacketed cable—for power and outputs (lengths up to 200' available).
	Remote Display Cable *(AG3000r)*	20ft (6m) standard length polyurethane jacketed cable—for connection between meter and remote display (lengths up to 200' available).
Conductivity		>20 microSiemens/cm
Empty Pipe Detection		Hardware/software, conductivity-based
Regulatory		CE (EN 61326)
Environmental		NEMA 6P, IP68 (10ft (3m) depth, continuously)

Modbus is a registered trademark of Schneider Electric.

* *Specifications subject to change. Please consult our website for the most current data (www.seametrics.com).*

[1] *If forward and reverse flow data needs to be sent to another device, either the Digital or Modbus output is required.*

[2] *Rate Time Unit is available in Day only.*

Dimensions

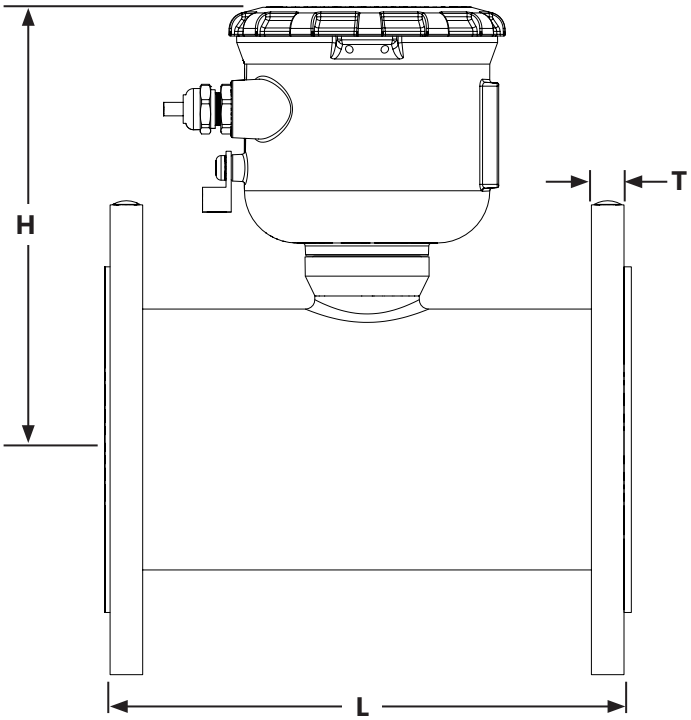

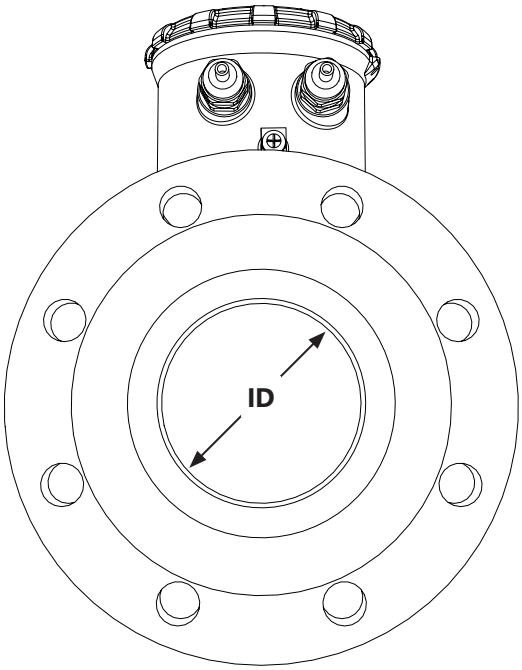

AG3000 Meter Size	L		H		T		ID		Shipping Weight	
	inch	mm	inch	mm	inch	mm	inch	mm	lbs	Kg
3”	12.25	311.15	7.08	179.8	.68	17.25	2.6	66.04	38	17
4”	10.24	260	8.3	211	.62	15.7	3.12	79	33	15
6”	12.27	312	9.1	231	.69	17.5	5.05	128	49	22
8”	14.24	362	10.1	257	.69	17.5	6.44	164	70	32
10”	18.18	462	11.2	284	.69	17.5	8.61	219	130	59
12”	19.68	500	12.2	310	.81	20.6	10.55	268	170	77
Flanges	Standard ANSI 150 lb. drilling								Cable 1 lb.	

Install security seal during installation if regulations require.

AG3000 Accuracy

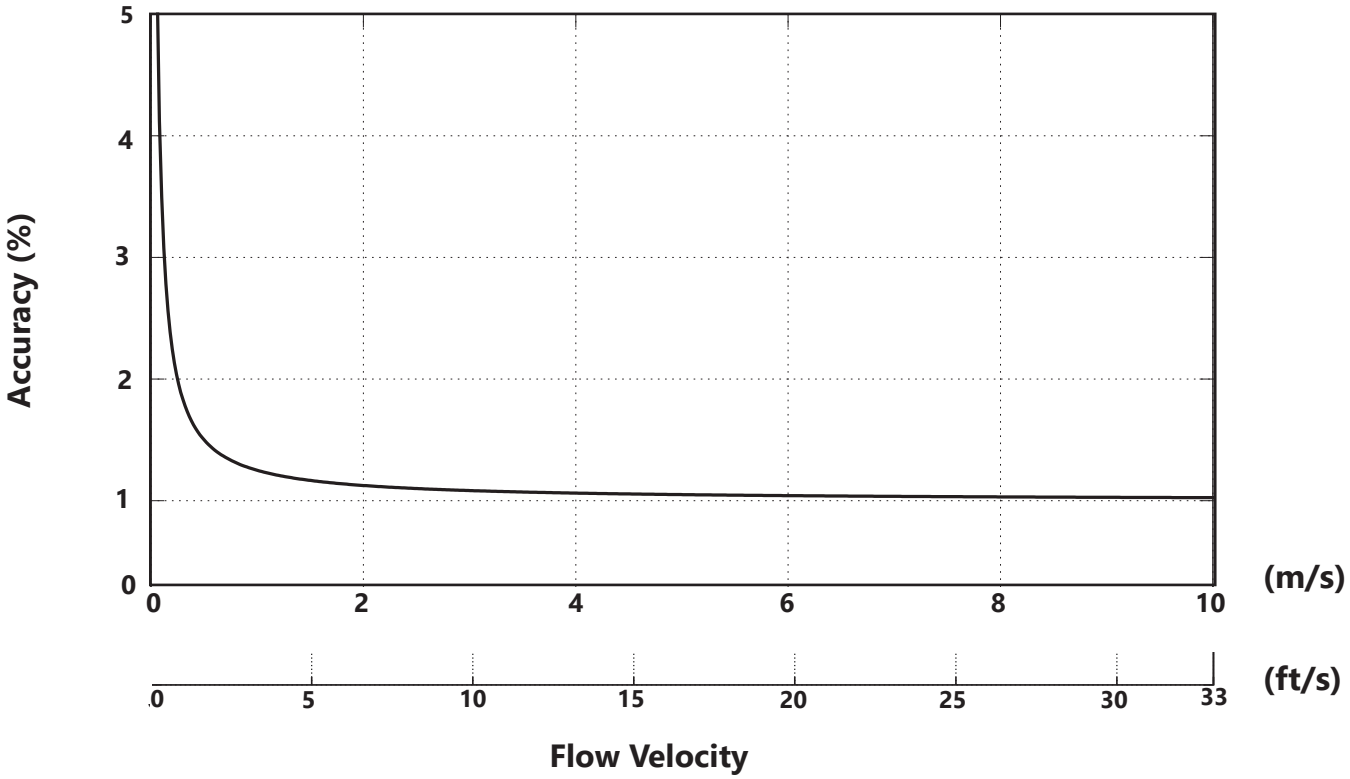

Flow Rate (3″ - 12″)

Pipe Size *(Inches in diameter)*	3″	4″	6″	8″	10″	12″
Max Flow Rate *(Gallons/Minute)*	723	1285	2891	5140	8031	11565
Cut-off (min) Flow Rate *(Gallons/Minute)*	3.62	6.43	14.46	25.70	40.15	57.82
Max Flow Rate *(Liters/Second)*	46	81	182	324	507	730
Cut-off (min) Flow Rate *(Liters/Second)*	0.23	0.41	0.91	1.62	2.54	3.65
Max Flow Velocity *(Meters/Second)*	10	10	10	10	10	10

Straight Pipe Recommendations (X = diameter)

NOTE: These configurations are to be used as general guidelines and do not cover every possible installation. A combination of two or more obstructions will require additional straight pipe. If there is any concern about the length of pipe required for a specific application, please contact your local dealer.

Reduced Pipe

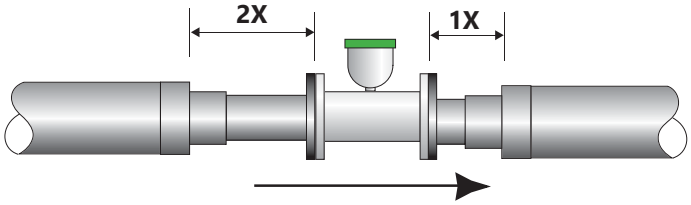

Two Elbows In Plane

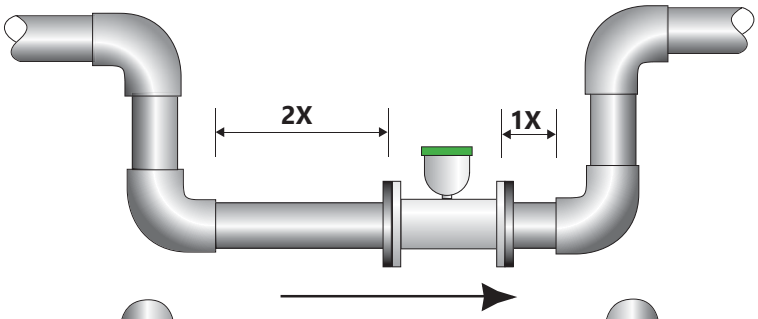

Two Elbows, Out Of Plane

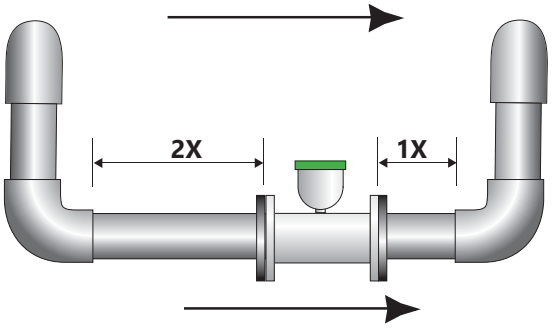

Expanded Pipe

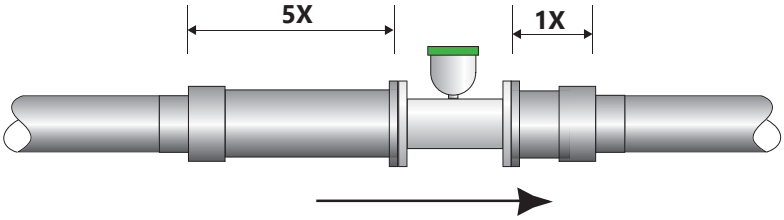

Swirling Flow: Propeller Meter

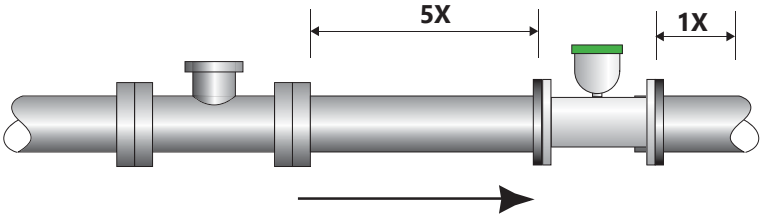

Swirling Flow: Partially Open Butterfly Valve

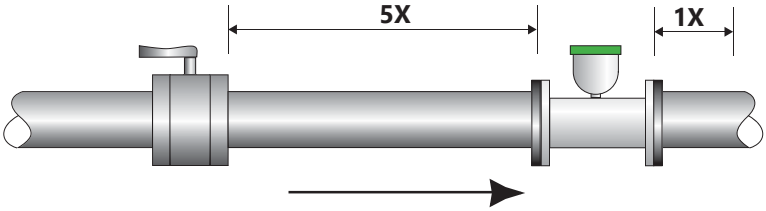

Full Pipe Recommendations

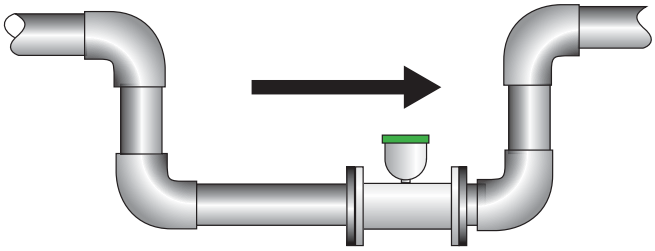

Recommended:
Keep pipe full at meter for accuracy

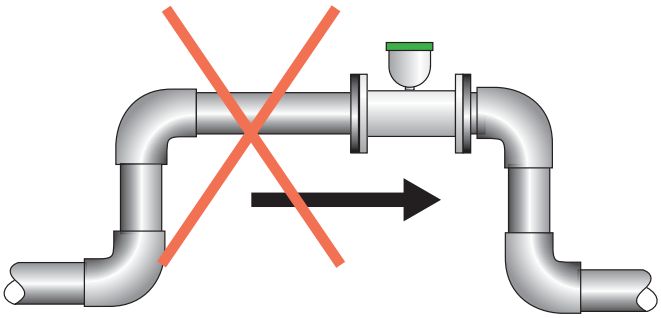

Not Ideal:
Allows air pockets to form at meter

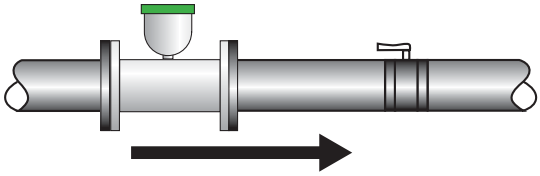

Recommended:
Keeps pipe full at meter for accuracy

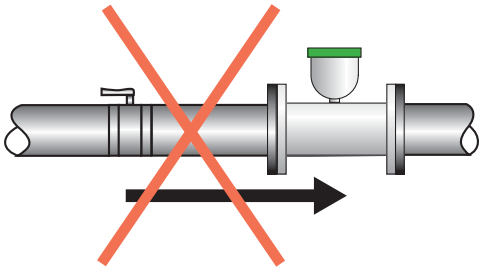

Not Ideal:
Post-valve cavitation can create air pocket

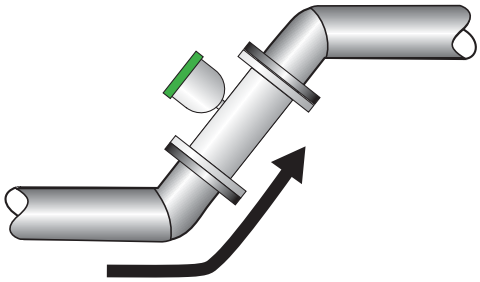

Recommended:
Allows air to bleed off

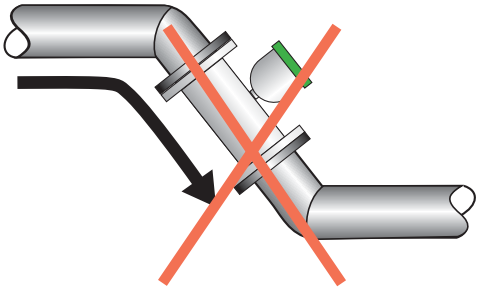

Not Ideal:
Air can be trapped

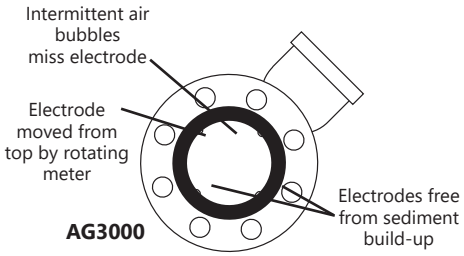

Best:
Improved accuracy results from unimpeded electrodes

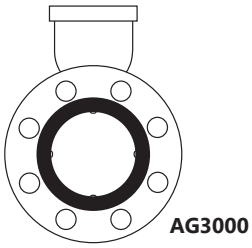

Not Ideal:
If pipe contains air bubbles or sediment (may affect accuracy)

Positioning the Meter

CAUTION: These flow sensors are not recommended where installation may exceed a maximum recommended operating temperature of 130˚ F.

These meters can be installed horizontally, vertically (with upward flow), or in any radial position.

The meter must not be installed where it will be exposed to extreme levels of vibration.

Using a check valve on the upstream side of the meter, and/or an air vent (vacuum relief valve) in the same, unobstructed run of pipe as the meter, is required in any installation where the meter may be exposed to suction when the system is not in normal operation. Suction can cause damage to the liner. Liner damage caused by suction, without the use of a check valve and/or air vent, may void the warranty.

Straight Pipe Recommendations. The AG3000 requires straight pipe before and after the meter for best accuracy. However, the ability of electromagnetic meters to average the flow across the entire pipe allows for shorter straight pipe recommendations than most mechanical meters (see page 7).

Full Pipe Recommendations. To prevent false readings, this meter is designed to indicate 'EMPTY PIPE' if one or more electrodes is exposed. For highest accuracy, install the meter so that the pipe will be full when there is flow. If air bubbles may be present in the pipe or sludge accumulation is an issue, rotate the meter by one flange hole to position the control housing at a 45˚ angle (see diagrams on page 8).

Fittings. The AG3000 has ANSI 150 lb. drilled flanges and will mate with any other ANSI 150 lb. flanges. *See table on page 10 for flange bolt tightening torque specifications.*

Calibration. The AG3000 is factory-calibrated before shipping. The frequency of recalibration will depend on the needs of each application and local regulatory policies.

Chemical Injection. When the AG3000 is used in a chemical injection application, **the chemical injection point must be placed downstream of the magmeter OR far enough upstream for complete mixing to occur before the fluid reaches the meter.** When unmixed chemical alternates with water passing through the meter, the rapid changes in conductivity may cause sudden spikes and drops in the meter's reading, resulting in inaccurate measurement. The magmeter will re-stabilize, however, with a steady flow of fluid of uniform conductivity.

CAUTION: In chemical injection applications, install chemical injection point downstream of magmeter, or far enough upstream to allow complete mixing of fluids.

Installing Gaskets

GASKETS
Gaskets are required at all junctions.

1. Be sure all mating surfaces are smooth and free of debris.
2. Install Seametrics provided gaskets, or equivilent, on each end of meter as shown in diagrams below. If using grounding rings, install one gasket on each side of the grounding ring.
3. **Failure to install gaskets will void warranty.**

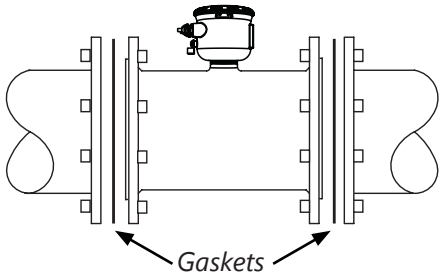

Installation without grounding rings

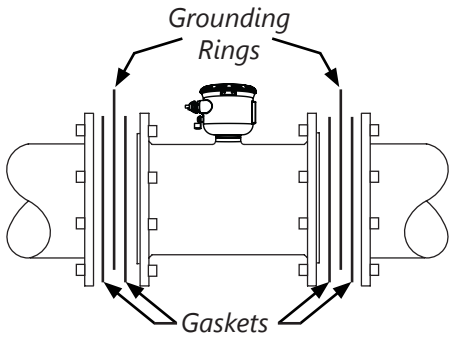

Installation with grounding rings

Tightening Flange Bolts

NOTE: Mating pipe flanges must be ANSI 150# full face (FF) and/or raised face (RT).

1. Tighten flange bolts in an alternating pattern.
   - Tighten left flange bolt-1 to 20% recommended torque.
   - Tighten right flange bolt-1 to 20% of recommended torque.
   - Repeat steps a and b for each bolt in an alternating order, such as shown at right, tightening to 40%, then 60%, then 80%, and then 100%.
2. Test for leaks.
3. If needed, tighten further in 10% increments until leaking stops. **DO NOT over-tighten. Over-tightening can cause serious damage to the flow meter.**
4. Recheck after 24 hours, adjusting if needed.

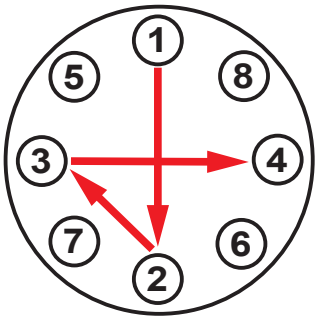

Suggested Tightening Sequence

Caution: Improper tightening sequence can cause serious damage to the flow meter.
- Do not tighten one side at a time.
- Do not tighten each bolt completely at one time.

SUGGESTED FLANGE BOLT TORQUE

Pipe Size	Liner	
	ft-lb	Nm
3″	25	34
4″	20	27
6″	42	57
8″	65	88
10″	73	99
12″	97	132

Equalization and Grounding

WARNING: ELECTRICAL SHOCK HAZARD
When the AG3000 is installed in a plastic piping system, or when externally powered, the piping system must be grounded to meet national and local electrical safety codes. Failure to do so can result in electrocution.

Metal Pipe Installations. To equalize the electrical potential of the fluid, the AG3000 meter, and the surrounding pipe, secure the flange plates (factory-installed on the equalization wire) to both pipe flanges at one of the bolt holes, as shown below. Be sure the lock washer fits between the pipe flange and the flange plate. For the best electrical bonding, remove rust and paint to expose clean, bare metal where the equalization flange plate lock washer contacts the pipe flange. Connection must be inspected periodically for corrosion to maintain the necessary low resistance connection.

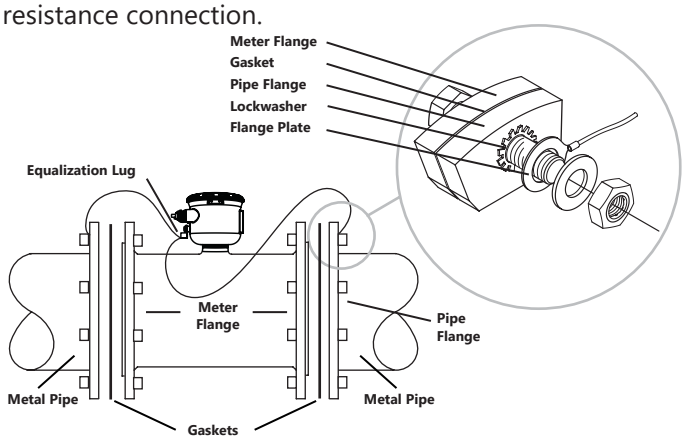

Plastic Pipe and Electronically Noisy Installations. When the AG3000 is installed in plastic pipe or in an electrically noisy system (near a VFD etc.), grounding rings are recommended. As shown in the diagram below, the equalization wires should be solidly connected to the grounding ring tabs instead of the flange bolts as in metal piping installations. Where lightning is a threat, or in severe electrical environments, an optional connection to a nearby equipment ground or ground rod may be advisable.

Grounding Ring Part Numbers:
3″ = 102157 8″ = 100878
4″ = 100876 10″ = 100879
6″ = 100877 12″ = 103288

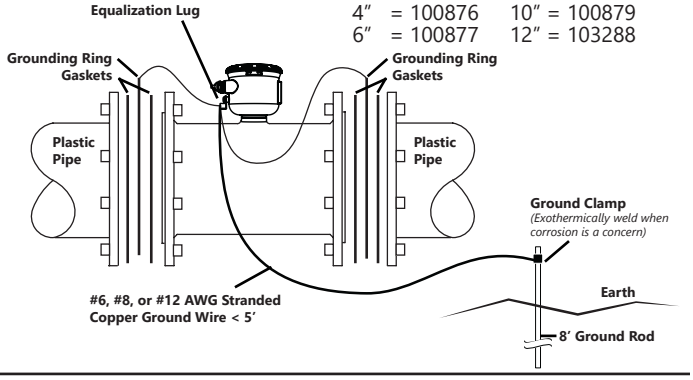

AG3000 General Cable Information

In the AG3000 meter, there are a maximum of two Power/Output cables that can be installed. These cables contain the wires for DC power and for any available options (Modbus®, HART, 4-20mA, and scaled pulse). (See Sample Cable Wiring Diagrams and Cable Wiring Table.) It is up to the user to decide how to best organize the wiring for the application.

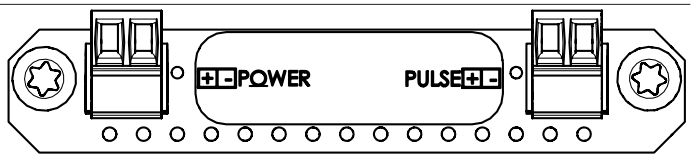

Two 2-pin Connectors for AG3000 Battery Version

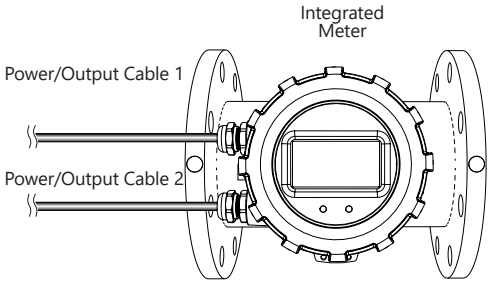

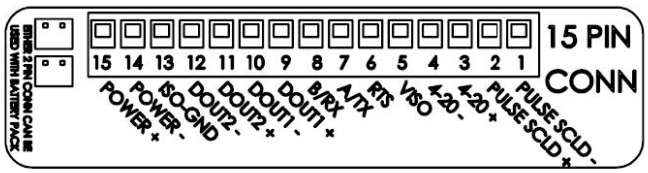

15 Pin Connector for AG3000 DC Versions

The AG3000 is available in either Battery or external DC versions.

Note that when viewing the connectors from the front of the meter, the labels will be upside down with numbering going from left to right.

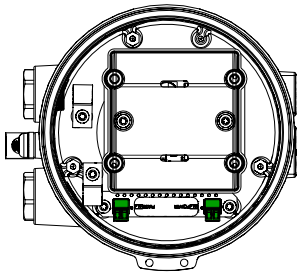

Battery version with two 2-pin connectors

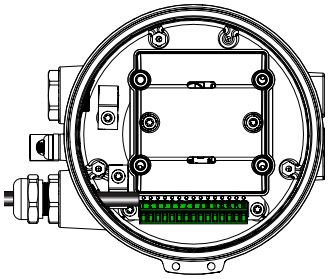

DC version with a 15-pin connector. (Your meter may have one or two cable glands, depending on configuration.)

Cable Gland Opening and Sealing

WARNING: Improper sealing of glands or cables (or direct connection with conduit to meter) will invalidate any warranty. If plugs or cable glands are removed, reinstall using Teflon pipe sealant, or tape, to ensure maximum moisture protection.

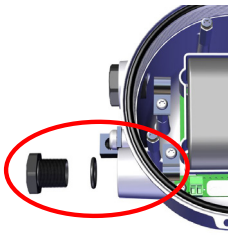

Remove plug & o-ring. Insert cable gland/strain relief. Feed cable through cable gland.

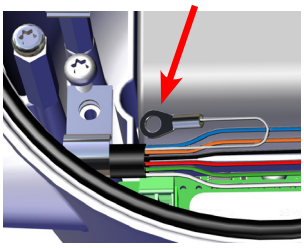

Clamp cable with strain relief clips. Attach drain wire lug to bracket post.

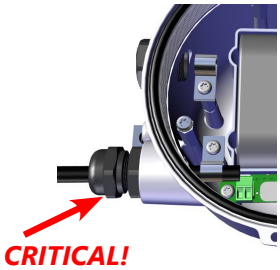

CRITICAL!
Torque cable gland sealing nut to 22 in-lbs.

Cable Installation (Wiring)

DC Version or Battery Only Version with external pulse output.

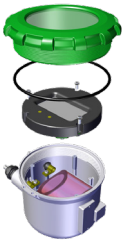

1. Unscrew the display lid and remove it.
2. The display assembly is held in with 3 fasteners. If those fasteners are steel screws (silver) remove them with a T-15 Torx driver and lift the display out of the meter. If the fasteners are white Nylon tabs with exposed straight slots, simply grasp the two finger recesses in the display, then pop the display up and out of the housing. This will expose the internal connectors. Be sure **NOT** to undo any connections to the display assembly as you remove it.
3. The DC version comes with a 15 pin screw connector. Remove this from its bag. (On the battery version, there are two 2-pin connectors already installed.)
4. Remove the plug and o-ring from the cable port(s) where you want to insert the cable(s).
5. Install cable gland(s) using Teflon pipe sealant, or tape, and insert cable end(s).
6. Strip cable jacket and conductors and install the wires into the connectors in their respective locations for your options, Modbus®, pulse, HART, etc. (See Cable Wiring Table for details.)
7. If using the 15 pin screw connector, plug it into its socket. **Be sure all pins align properly and that the connector has not slipped to one side.**

Improper alignment

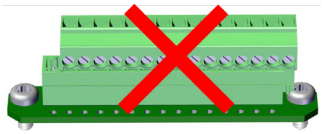

Proper alignment

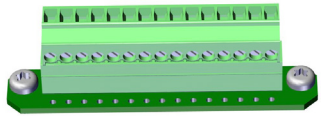

8. Plug the battery cable into the circuit board, as shown:

Battery connection

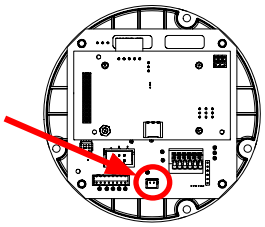

9. Secure the cables inside the internal strain relief clip and tighten the cable gland sealing nut securely (torque nut to 22 in-lbs). A loose nut could cause moisture ingress and compromise the meter head's IP68 rating, voiding the warranty.
10. Remount the display assembly, being careful to not pinch any wires, and install the display assembly screws.
11. Reinstall the display lid, being sure to avoid cross-threading the lid.

Battery Only Version with <u>no</u> external pulse output

No wiring is needed.

Wiring Diagrams

Unscrew the display lid and remove it. The display assembly is held in with 3 fasteners. If those fasteners are steel screws (silver) remove them with a T-15 Torx driver and lift the diplay out of the meter. If the fasteners are white Nylon tabs with exposed straight slots, simply grasp the two finger recesses in the display, then pop the diplay up and out of the housing. Remove the 15 pin screw connector from its bag. Install the wires through the cable glands and into the 15 pin screw connector in their respective locations. Plug the 15 pin screw connector into its socket. **Be sure all pins align properly and that the connector has not slipped to one side.** *(C1 = power/output cable, C2 = power/output cable 2)*

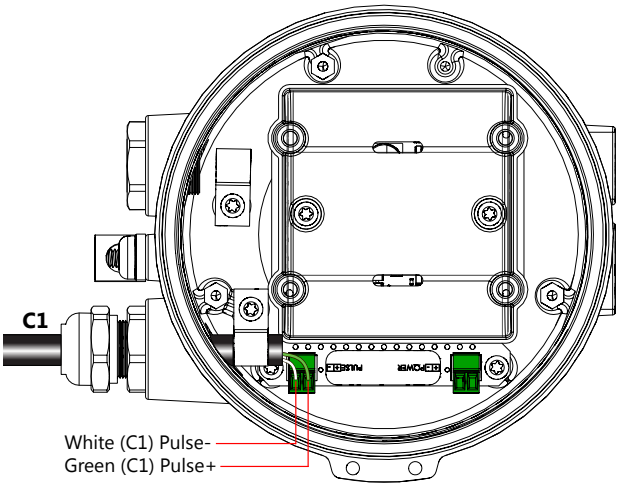

Battery Power with Pulse (BXX)

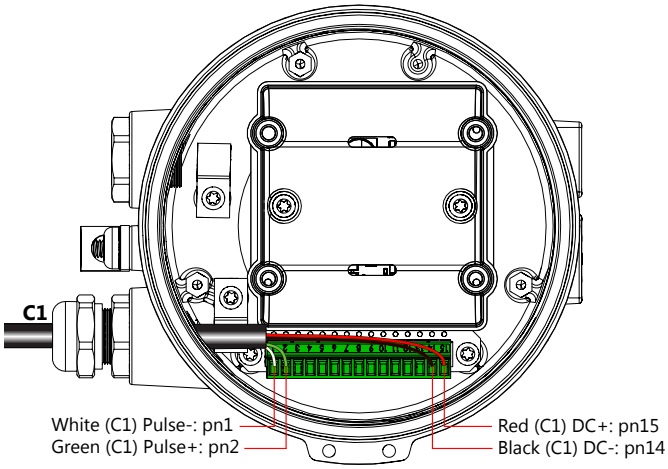

DC Power with Pulse (D1X/D2X)

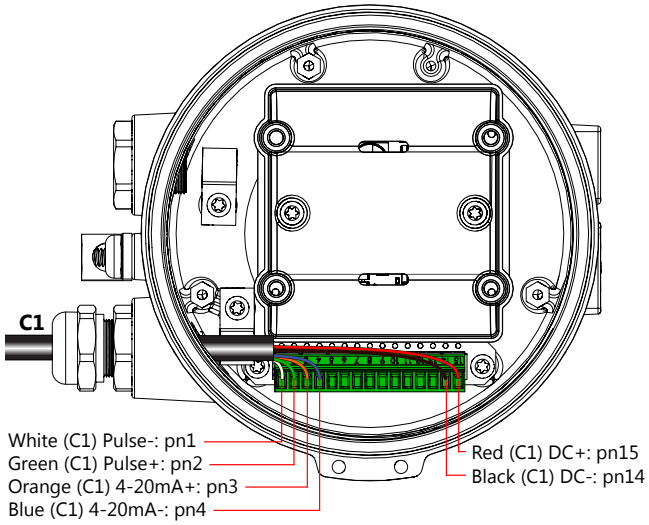

DC Power with Pulse and 4-20mA (D1L/D2L)

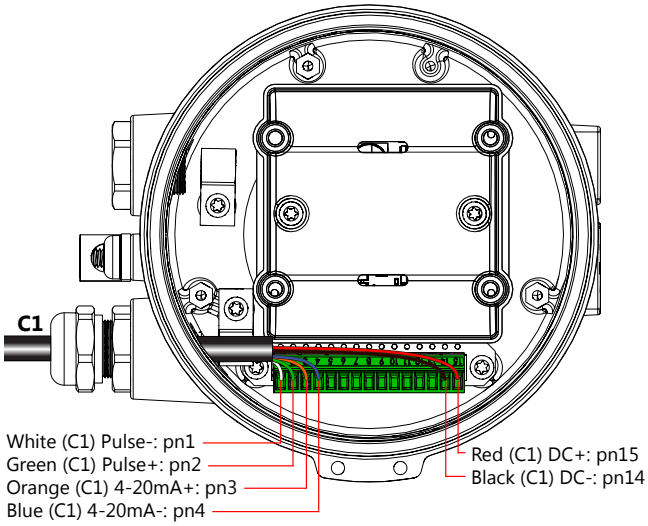

DC Power with Pulse and HART/4-20mA (D1H/D2H)

Wiring Diagrams (continued)

Unscrew the display lid and remove it. The display assembly is held in with 3 fasteners. If those fasteners are steel screws (silver) remove them with a T-15 Torx driver and lift the diplay out of the meter. If the fasteners are white Nylon tabs with exposed straight slots, simply grasp the two finger recesses in the display, then pop the diplay up and out of the housing. Remove the 15 pin screw connector from its bag. Install the wires through the cable glands and into the 15 pin screw connector in their respective locations. Plug the 15 pin screw connector into its socket. *(C1 = power/output cable, C2 = power/output cable 2)*

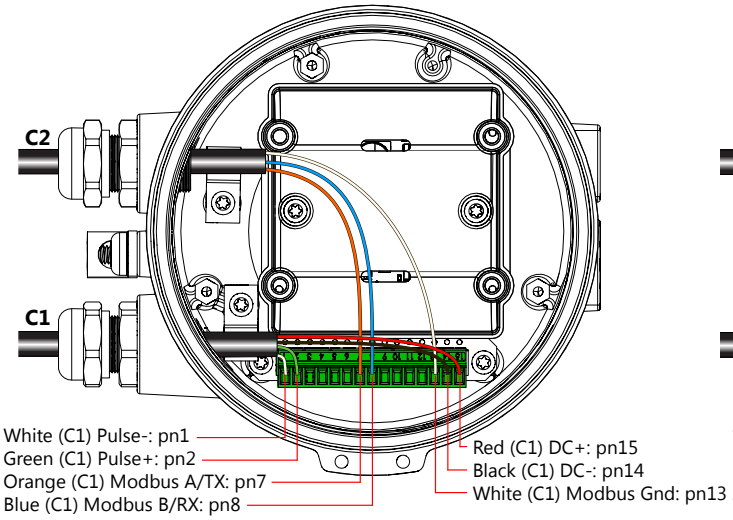

DC Power with Pulse and Modbus® (D1S/D2S)

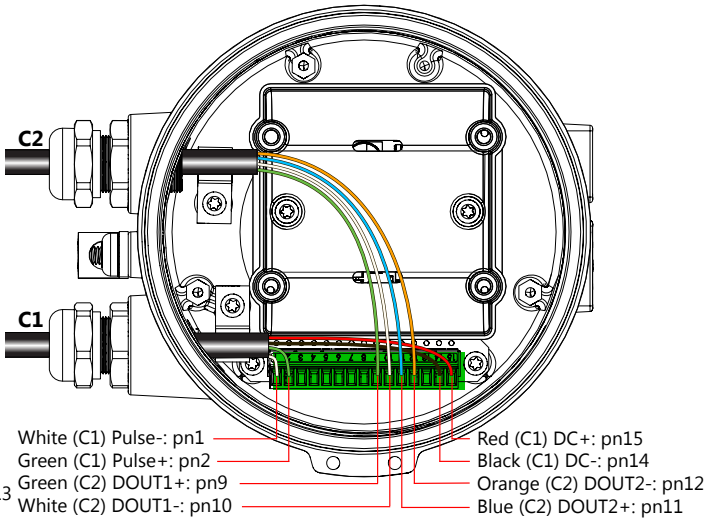

DC Power with Pulse and Digital (D1G/D2G)

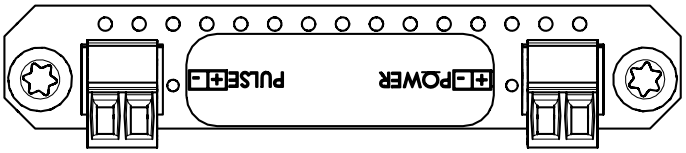

Two 2-pin Connectors for AG3000 Battery Version

Note that when viewing the connectors from the front of the meter, the labels will be upside down, as shown here, with numbering going from left to right.

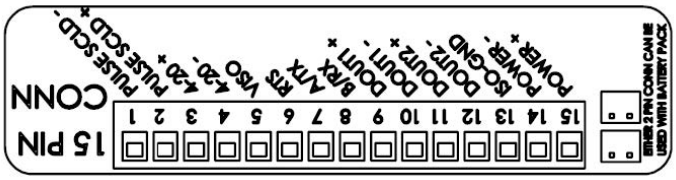

15 Pin Connector for AG3000 DC Versions

Plug the backup battery cable into the circuit board

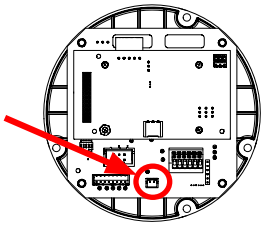

WARNING: BACKUP BATTERIES ARE NOT INTENDED AS A PRIMARY POWER SOURCE OF A MAINS (DC or AC) CONFIGURED METER.

Cable Wiring Table

PIN	15	14	13	12	11	10	9	8	7	6	5	4	3	2	1
O ID	**PWR+**	**PWR-**	**ISO-GND**	**DOUT 2-**	**DOUT 2+**	**DOUT 1-**	**DOUT 1+**	**B/RX**	**A/TX**	**RTS**	**VISO**	**4-20 -**	**4-20 +**	**PULSE SCLD+**	**PULSE SCLD-**
BXX														GREEN C1	WHITE C1
D1X/ D2X	RED C1	BLACK C1												GREEN C1	WHITE C1
D1L/ D2L	RED C1	BLACK C1										BLUE C1	ORNG C1	GREEN C1	WHITE C1
D1H/ D2H	RED C1	BLACK C1										BLUE C1	ORNG C1	GREEN C1	WHITE C1
D1S/ D2S	RED C1	BLACK C1	WHITE C2					BLUE C2	ORNG C2					GREEN C1	WHITE C1
D1G/ D2G	RED C1	BLACK C1		ORNG C2	BLUE C2	WHITE C2	GREEN C2							GREEN C1	WHITE C1

(C1 = power/output cable 1 C2 = power/output cable 2)

Option IDs

O ID		POWER SOURCE / OUTPUT(S)
BXX	=	BATTERY POWER / PULSE SCALED
D1X/D2X	=	DC POWER / PULSE SCALED
D1L/D2L	=	DC POWER / PULSE SCALED AND 4-20mA
D1H/D2H	=	DC POWER / PULSE SCALED AND HART/4-20mA
D1S/D2S	=	DC POWER / PULSE SCALED AND MODBUS®
D1G/D2G	=	DC POWER / PULSE SCALED AND DIGITAL

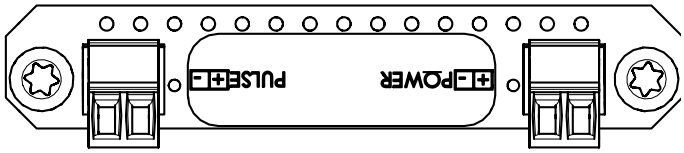

Two 2-pin Connectors for AG3000 Battery Version

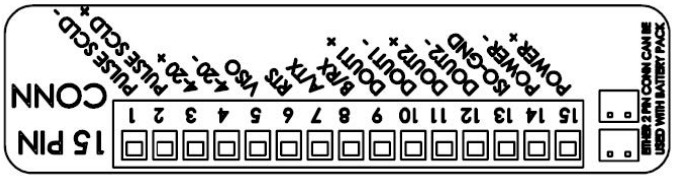

15 Pin Connector for AG3000 DC Versions

Note that when viewing the connectors from the front of the meter, the labels will be upside down, as shown above, with numbering going from left to right.

Pulse Output Application - Sourcing Mode (Recommended for Rin < 30kΩ)

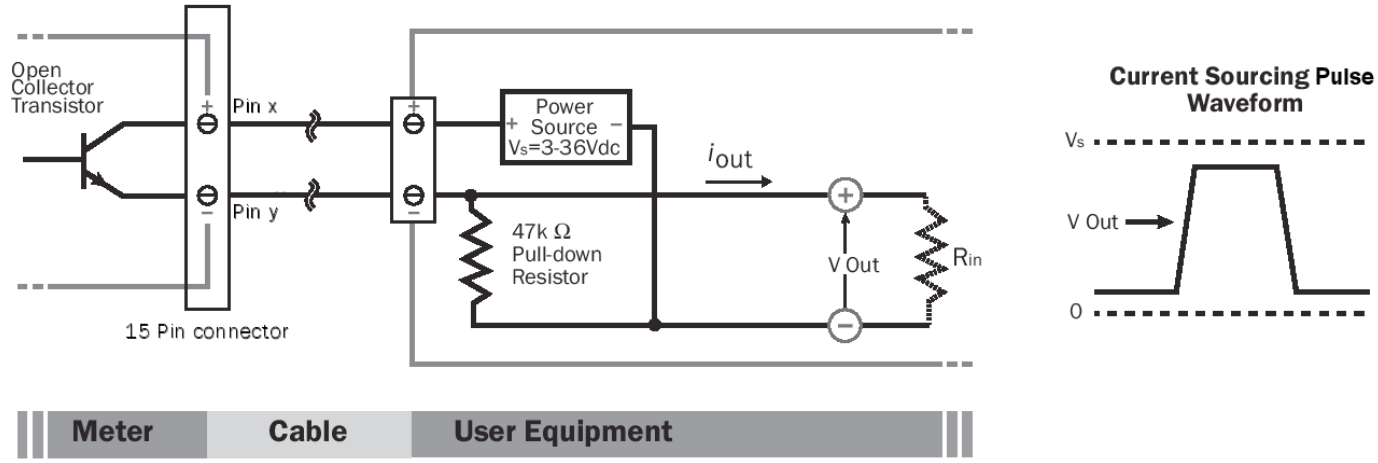

Pulse Output Application - Sinking Mode (Recommended for Rin > 30kΩ)

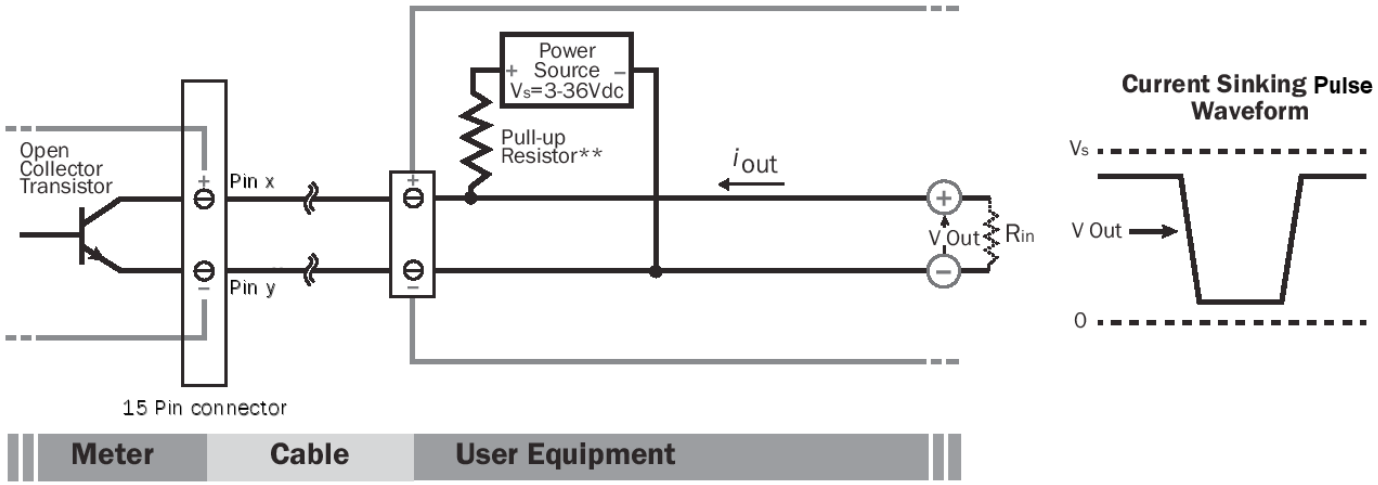

Analog (4-20mA Current Loop) Output Application

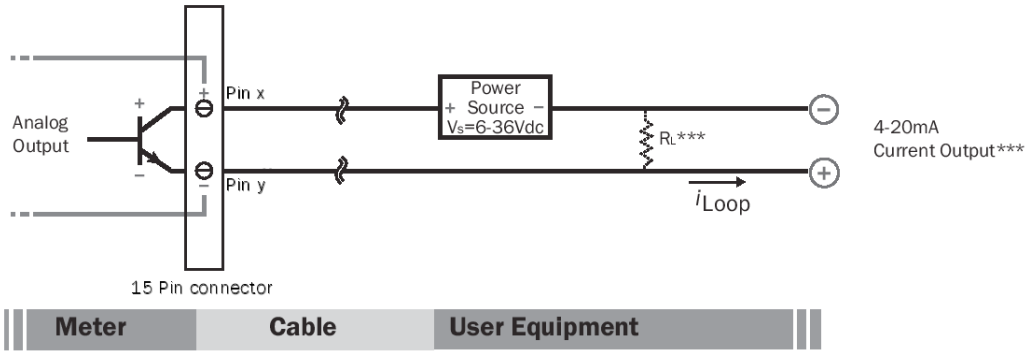

*** Minimum resistor value is (100 x Vs) ohms. Higher resistances maybe used depending on frequency and cable length. Longer cables and high frequencies require lower resistance.*

**** Resistor RL converts 4-20mA current to voltage for voltage input only devices.*

Cable Shield. In general, the cable shield and its bare drain wire should be left unconnected at the user equipment end of the cable to minimize "ground loop" problems.

Pulse Output Configuration. A pulse output is standard on all models. Since this is an isolated output, the external equipment must include a DC power source to regenerate the pulse from the open-collector output (transistor equivalent of a contact closure). A pull-up or pull-down resistor may be needed if not included in the user equipment as shown in the diagrams. Both the power source and resistor may be supplied internally in some types of control and monitoring devices. If not, as for most PLC discrete input modules, they must be added externally at the module input terminals. The pulse output rate in volume units/pulse can be set by the user via the SETP tab on the meter's setup menus.

Because the pulse output of an AG3000 meter is set by the user, care must be taken to assure the output pulses do not exceed the maximum frequency of the meter while also ensuring a reasonable resolution.

K-factor: Remember that SETP is expressed in units totaled per output pulse (G/P if using gallons) while K-factors are expressed in pulses per gallon (P/G.) To determine K-factor from SETP, divide 1 by SETP (if SETP is expressed in gallons.) Conversely, 1 divided by the K-factor equals SETP

AG3000 meters that were initially configured as battery powered units have a maximum output frequency of 150 Hz. Those that were initially configured as powered units have a maximum output frequency of 200 Hz.

Because all pulse outputs (SETP) are configured in (rate) units totaled per pulse, all sizes of meters can be configured with the same SETP values

For example, if your rate is chosen as gallons per minute (GPM) the table below applies. If your rate is different, simply use your rate label in place of (GPM.) The numerical values will remain the same.

Pulse Units. The units of measure of SETP are independently selectable and are not tied to rate or total. Upon change of the SETP unit, the pulse output may take up to 10 seconds, or the duration of one pulse (whichever is longer) to take effect.

If Pulse Output is Inconsistent. The PDAMP filter may need to be increased.

Pulse Width Timing. The unit and value of SETP must be chosen to keep the duration between meter pulse outputs to less than 500 seconds.

Pulse Timing in Battery Powered Units. The output pulse width in battery powered units is short and varies with pulse frequency. (See table)

SETP	Flow Rate at 1 Hz (GPM)	Flow Rate at 200 Hz (GPM) *Powered Meters*	Flow Rate at 150 Hz (GPM) *Battery Powered Meters*
0.1	6	1200	900
0.2	12	2400	1800
0.3	18	3600	2700
0.4	24	4800	3600
0.5	30	6000	4500
0.6	36	7200	5400
0.7	42	8400	6300
0.8	48	9600	7200
0.9	54	10800	8100
1.0	60	12000	9000

Lower frequency output pulses (1 pulse for some particular number of gallons) can also be set.

Any output frequency can be determined by:

Rate (units/minute) ÷ SETP (units/pulse) = pulse/minute
Hz = pulse/minute ÷ 60 seconds / minutes

For reference/comparison only

K-factors and the equivalent SETP values for old style WMX units are shown below.

WMX	4"	6"	8"	10"	12"
K-Factor	16.36	6.31	3.34	2.15	1.53
SETP	0.06*	0.16	0.30	0.47	0.65

**Note that on the AG3000 you would need to choose a SETP value of 0.1 for the 4".*

Output Pulse Width of Battery Powered Units		
Output Pulse Frequency	Output Pulse Width as a Percentage of the Pulse Period (Pulse period = 1000 milliseconds/frequency)	
Zero to 1 Hz	Multiply the pulse period by 0.01	= Output Pulse Width (ms)
1 to 20 Hz	Multiply the pulse period by 0.05	= Output Pulse Width (ms)
20 to 100 Hz	Multiply the pulse period by 0.1	= Output Pulse Width (ms)
100 to 150 Hz	Multiply the pulse period by 0.15	= Output Pulse Width (ms)

Example: If frequency = 20 Hz then the pulse period = 50 milliseconds and pulse width = (.05 x 50 milliseconds) = 2.5 ms

Analog Output (4-20mA) Configuration. *(Not available on battery only units.)* Since the meter's analog output is isolated and passive, loop power must be supplied externally as shown on a previous page. (In addition, an external resistor R_L will be needed to convert the loop current to voltage for voltage-only input devices.) The meter's loop transmitter minimum voltage drop is 6Vdc (8Vdc with HART) which, with wiring resistance and loop power supply voltage, will determine the maximum resistance for R_L. The flow rates corresponding to 4 and 20mA can be set by the user via the SET 4 and SET20 tabs on the meter's setup menus.

Note: As configured by the factory, any alarm state will force 22.8mA on the loop. This can be changed to 3.2mA - see Technical Bulletin, 'iMAG4700/AG3000: Changing the 4-20mA Alarm'.

HART Configuration. *(Not available on battery only units.)* The HART protocol, rev.7.5, allows for a Polling address between 0 and 63. The default value in the AG3000 is 0. To change the Polling address, use AG3000 menu HPOLL to set the Polling address.

To get to this menu, move to the EXIT tab and tap the left button 4 times. This will bring up the SUBMENU page. Navigate to the HPOLL tab. Use the left button to select the Polling address.

To enter SUBMENU

To select address

(See Changing Flow Meter Settings later in these instructions for details in using the menu system.)

A minimum of 250 ohms of loop resistance must be present in order for the HART modem to correctly and reliably demodulate FSK voltage. With this in mind, the maximum loop resistance* for the AG3000 HART interface cannot be exceeded in order to assure correct operation.

The AG3000 HART interface is HART compatible. All the commands have been implemented in accordance with the HART Protocol Specification published by HART Foundation. A HART Communicator can be used with the AG3000, even in the absence of DD files, by taking advantage of the Generic Online Menu capability of a Communicator. This means that a generic menu is automatically available when DD files are not present.

The following information from the AG3000 HART can be displayed on the Communicator using the generic menu:

PV	Flowrate in units selected for AG3000
PV Loop Current	Loop current in mA
PV LRV	Lower range value of PV in units selected for AG3000
PV URV	Upper range of PV in units selected for AG3000

**4-20 mA loop has maximum loop resistance of 650ohms and requires a 24Vdc power supply.*

Modbus® Serial Communication Configuration (factory configured). *(Not available on battery only units.)* These connections provide a half-duplex, isolated, RS485 serial communications port using the Modbus messaging protocol. The port is reconfigurable by internal jumper settings to full-duplex RS232 or 3.3V CMOS (See Seametrics Modbus Interface Description manual for instructions). The TXD connection is the transmitted data output from the meter and RXD is the received data input to the meter. See Seametric's Modbus Interface Description, LT-103393 (available at www.seametrics.com) for supported Modbus message protocol and electrical interface specifications.

Digital Output (High Frequency) Configuration. *(Not available on battery only units.)* These outputs are electrically similar to the Pulse Output described above except they are capable of output frequencies up to 10kHz. The frequency output scaling can be set by the user via the SETF tab on the meter's setup menus. Selections are: 500Hz and 1, 2, 5 and 10 KHz at maximum flow rate.

DOUT1 Pulses in forward direction

DOUT2 Pulses in reverse direction

K-Factors for High Speed Digital Output (High Frequency)

	SETF (Hz)				
Size	**500**	**1K**	**2K**	**5K**	**10K**
3"	41.55	83.10	166.2	415.51	831.02
4"	23.35	46.69	93.39	233.5	466.9
6"	10.38	20.75	41.51	103.8	207.5
8"	5.837	11.67	23.35	58.37	116.7
10"	3.736	7.471	14.94	37.36	74.71
12"	2.594	5.188	10.38	25.94	51.88

Changing Flow Meter Settings

Home Screen and General Navigation

The HOME Screen displays flow volume, direction of the flow total and flow RATE along with status conditions such as Empty Pipe. Two buttons below the LCD display are used to access menu screens for viewing and changing meter setup parameters.

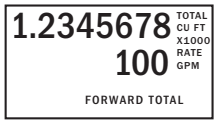

These two buttons are light sensors which can detect when a finger is covering them and activate upon release. Only three button touch actions are needed to control navigation through the menus, settings changes and back to the home screen.

HORIZONTAL SCROLLING:
Tap right button to scroll horizontally through menu tabs or move horizontally within a tab dialog when applicable.

SELECT:
Tap left button to change a highlighted item within a tab dialog.

ENTER/EXIT:
Hold left button while tapping right button once to enter or exit a tab dialog or to navigate between the HOME and other menu screens.

Changing Total Direction/Resetting Batch Totalizers

On the Main screen, hold ▶ and tap ▲ 5 times to scroll through the total direction options. Release ▶ to select a total direction.

Once BATCH FORWARD or BATCH REVERSE is selcted, tap ▶ four times to reset batch totalizer.

Entering Menu System

To enter the Menu System perform the hold and tap sequence. The Passcode entry screen will display. The default passcode is 000000. If a different passcode has previously been set, use the ▲ and ▶ to enter that passcode. In either case, hold and tap again to move into the menu system. (*If you enter the wrong passcode, hold and tap again to return to the previous screen. See page 21 for information on how to change a passcode.)*

Making Selections

Once in the Menu System, move from tab to tab by tapping the right button. (See the next page for details on the various available tabs.)

Select the parameter. In the screen for the highlighted tab you will see the current parameter value for that tab. Tapping the right button, move to the tab for the parameter you want to change.

In this example, the first line indicates that the current unit for the TOTAL is GALLONS. The next two lines tell you what to do next.

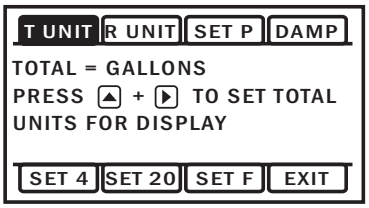

If you would like to change the TOTAL units, just perform the hold and tap sequence to bring up a screen to change the setting.

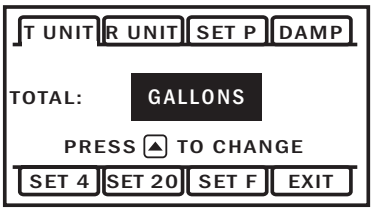

Select a new setting. Select the new setting by scrolling through a list of selections as in the screen illustration below by tapping the left button to find a different TOTAL unit.

Accept changes. To accept any changes you have made, perform the hold and tap sequence.

When finished making changes. When you are finished making changes, move to the EXIT tab using the right button.

To return to the HOME screen, perform the hold and tap sequence.

Standard Menu Options

Note: Available options will depend on specific meter configuration. Not all options are available on all meters. **Options not ordered with your meter will not appear on the meter menu.**

T UNIT

View or change TOTAL volume units

```
T UNIT | R UNIT | SET P | DAMP
TOTAL = GALLONS
PRESS ▲ + ▶ TO SET TOTAL
UNITS FOR DISPLAY
SET 4 | SET 20 | SET F | EXIT
```

R UNIT

View or change flow RATE units

```
T UNIT | R UNIT | SET P | DAMP
FLOW RATE = GALLONS/MIN
PRESS ▲ + ▶ TO SET RATE
UNITS FOR DISPLAY
SET 4 | SET 20 | SET F | EXIT
```

SET P

View or change pulse output scaling

```
T UNIT | R UNIT | SET P | DAMP
00001.0 GALLONS
PRESS ▲ + ▶ TO SET
GALLONS TOTALIZED PER
PULSE SENT OUT PULSE1
SET 4 | SET 20 | SET F | EXIT
```

DAMP

View or change # of samples for rolling average.

```
T UNIT | R UNIT | SET P | DAMP
DAMPING = 1
PRESS ▲ + ▶ TO SET
DAMPING VALUE
SET 4 | SET 20 | SET F | EXIT
```

SET 4

View or change flow rate corresponding to 4mA. *(Externally powered units only)*

```
T UNIT | R UNIT | SET P | DAMP
00040.0 GALLONS/MIN
PRESS ▲ + ▶ TO SET FLOW
RATE AT WHICH 4mA
(MIN) OUTPUT IS DESIRED
SET 4 | SET 20 | SET F | EXIT
```

SET 20

View or change flow rate corresponding to 20mA. *(Externally powered units only)*

```
T UNIT | R UNIT | SET P | DAMP
00200.0 GALLONS/MIN
PRESS ▲ + ▶ TO SET FLOW
RATE AT WHICH 20mA
(MAX) OUTPUT IS DESIRED
SET 4 | SET 20 | SET F | EXIT
```

SET F

View or change high frequency output scaling. *(Externally powered units only)*

```
T UNIT | R UNIT | SET P | DAMP
FMAX = 1 KHz
PRESS ▲ + ▶ TO SET
MAX FOUT
SET 4 | SET 20 | SET F | EXIT
```

EXIT

Return to HOME SCREEN or enter SUBMENU

```
T UNIT | R UNIT | SET P | DAMP
PRESS ▲ + ▶ EXIT MENU
AND RETURN TO FLOW
DISPLAY
SET 4 | SET 20 | SET F | EXIT
```

Special SUBMENU for Further Options

The EXIT tab in the MAIN MENU has a second function. If, instead of using the hold and tap sequence to return to the HOME screen, you tap ▲ five times, you will be redirected to a SUBMENU screen from which you can access several more options.

Navigation in this SUBMENU is the same as for the MAIN MENU. Whenever you wish, go to the EXIT tab in the SUBMENU and perform the hold and tap sequence to return to the MAIN MENU.

```
INFO | COMM | MBID
PRESS ▲ + ▶ TO VIEW INFO
ABOUT METER
HPOLL | EXIT
```

Sub-Menu

INFO: Meter model number, serial number, and firmware version.

COMM: Modbus® baud rate and parity. *(Not available on battery only units.)*

MBID: Modbus® address *(Not available on battery only units.)*

SAMP: Sample rate *(Battery powered version only.)*

HPOLL: HART Address *(Not available on battery only units.)*

EXIT: Return to MAIN MENU or enter next submenu.

```
INFO
PRESS ▲ + ▶ TO VIEW INFO
ABOUT METER
SAMP | EXIT
```

Sub-Menu - Battery Only Version

To Change a Passcode and Decimal Places

The AG3000 has a passcode system for restricting access to the menus. The AG3000 comes from the factory with the passcode set to 000000. When a user attempts to enter the menu system (see details on page 19), the passcode entry screen will be displayed.

The default passcode is 000000. If a different passcode has previously been set, then the user must enter that passcode at this time. After entering the passcode, or leaving it at 000000 if using the default passcode, the user does the tap and hold sequence to move into the menu system.

To change the passcode, you must use the THIRD MENU screen. Access the THIRD MENU screen as follows:

- Enter the main menu system, as described above.

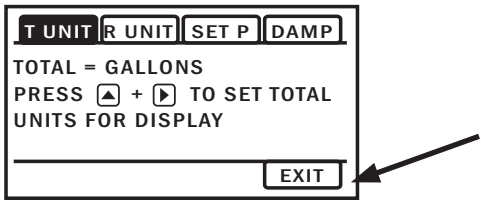

- On the main menu, tab over to the EXIT tab and tap the up arrow five times. A SUBMENU screen will display.

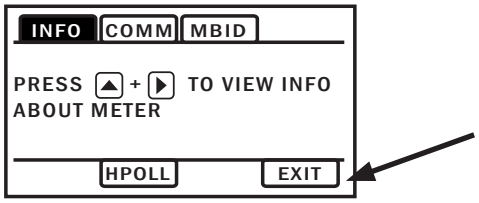

- On the SUBMENU screen tab over to the EXIT tab and tap ▲ five times. The THIRD MENU screen will display.

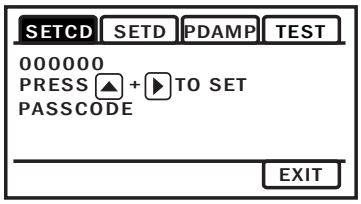

- To set the PASSCODE, hold and tap and then use the ▲ and ▶ to enter the new code.
- Hold and tap again to return to the THIRD MENU screen.
- Tab to EXIT, and then hold and tap to return to the SUBMENU.

To change the number of decimal places in the total

- To set the decimal point, hold and tap on SETD and then use the ▶ to move the decimal point.
- Hold and tap again to return to the THIRD MENU screen.
- Tab to EXIT, and then hold and tap to return to the SUBMENU.

PDAMP

PDAMP is used to view or change the number of samples for rolling average of pulse output.

TEST

TEST allows the user to initiate a fully functional, artificial flow rate for the purpose of testing other connected equipment. When TEST is applied, all features of the meter will function at the stated flow rate (in gallons per second).

For TEST to function, the meter must be filled (not EMPTY PIPE).

To enter a value into the TEST feature, navigate to the TEST tab and enter a flow rate value in the VAL screen (in gallons per second only,) then ▶ to the VAL box and ▲ to the ON screen. This will initiate the TEST feature. The next ▲ would bring you to the OFF screen, but you can 'hold and tap' the arrows to return you to the sub menu while the feature operates.

After use, the TEST feature must be turned OFF. If the TEST feature is not turned OFF, the stated static flow rate (in gallons per second) will be shown any time the meter is full or in a flowing condition. Flow values recorded by the meter while the TEST feature is operating are permanently recorded in the displayed TOTAL. It may be useful to note that these values are only written to permanent memory every 15 minutes and cycling all power within this 15 minute time frame will return the meter to its previous total.

Power Indicators

A power indicator is displayed in the lower left of the main display window.

Any meter powered from an external power source will display a power plug icon when running on external power. If the connection to external power is lost, the meter will switch to the backup battery and the power icon will switch to a battery symbol.

OK on the battery indicator means battery voltage is above 6.4 volts.

LO on the battery indicator means the battery is low and should be replaced soon.

Being powered by external DC or AC

Being powered by battery - voltage is sufficient

Being powered by battery - voltage is low

If display reads, 'BATT END' replace battery immediately.

Battery Powered Units

To 'wake up' a battery powered meter, you may need to hold the up arrow for 5 seconds and release. If the meter does not wake up on the first attempt, repeat the 5 second hold.

The AG3000 meter can come configured with one 7.2V 'D' size replaceable battery pack. In this configuration, the only option/output is the scaled pulse output which comes standard. The scaled output for the battery powered option has a maximum pulse rate of 150 pulses/second. Be sure to set your P value such that the meter will function properly over the flow range in your application. The sample rate of the meter is user selectable through the SAMP tab in the meter's sub-menu. Sample periods of 1/5, 1/3, 1, 3, 5, 15, 30, and 60 seconds can be selected. (A sample period of 5 seconds—5 year battery life—is the default.)

Larger sample periods will yield longer battery life but slower response time. Care must be taken to select a sample period that is suitable for your application. See the table below for the expected battery life as a function of sample period.

Battery Life/Sample Period

Sensor sample period(s) (Seconds)	Expected battery life*
1/5 (0.2)	7 months
1/3 (0.33)	1 year
1	2.25 years
3	4 years
5	5 years
15	6 years
30	6.25 years
60	6.5 years

**Based on 75% battery capacity at room temperature with no option cards installed.*

NOTE: If a large percentage of the meter's life will be spent below 0.5 meters/second and above cutoff, battery life will be reduced.

Troubleshooting

Problem	Probable Causes	Things to try...
Blank Display	Faulty wiring from power source to meter	Check for incorrect wiring. Measure voltage with DMM where red and black wires connect to terminal block TB1 on back side of display. Verify correct polarity and confirm that voltage is steady and between 9Vdc and 32Vdc
	Battery has not been plugged in	Plug in the battery
	Dead battery	Replace battery
Flow rate reading fluctuates excessively when flow is unchanging	Excessively turbulent or unsteady flow due to partially closed valves or other flow obstructions	Eliminate or minimize causes of flow disturbances or increase meter damping
	Pipe not full	Provide back pressure or other means to ensure pipe is filled
	Pulsing flow due to combining multiple upstream flow sources	Move connection point further upstream
	Insufficient mixing of upstream chemicals	Move chemical injection downstream from meter
	Low fluid conductivity < 20 µS/cm	Replace with different type of meter
	Noisy electrical environment	Improve grounding at meter and nearby potentially noisy electrical equipment. Increase distance between meter and electrical noise sources.
	Defective or noisy AC switching power supply	Replace power supply
Flow Rate appears correct but pulse/ frequency output is low, erratic or absent	Wiring incorrect	Compare wiring with appropriate wiring recommendations
	External device input impedance too low	Use sourcing rather than sinking interface connection
	Cable too long	Reduce interface pull-up resistance
Flow Rate appears correct but pulse/frequency output is erratic and/or too high	Electrical noise sources interfering with pulse frequency signal	Isolate, remove or reduce noise sources. Move meter control cable away from noise sources. Increase pulse damp setting (PDAMP)
	Wrong type of cable	Use only twisted pair cable and ensure both signal wires are on same twisted pair
	Grounding problem	Improve or try different grounding method

Error Messages

Under certain conditions an error message may be displayed.

Message	Description	Notes
INIT	Initialization is occurring during power up.	
EMPTY PIPE	Fluid is not detected between the sensing electrodes.	Loop output = 22.8mA
LO in battery icon	Battery is getting low, replace soon. Meter still functions.	Above 6.4V, OK appears in icon
BATT END	Battery is very low (approx. 6.1V). Totalizer stops updating.	Loop output = 4mA
LOW VOLT	Incoming external power is very low and backup battery is dead or not connected	Loop output = 4mA
COIL FAIL	Coil current too high or too low (short or open).	Loop output = 22.8mA
COMM FAIL	Communication between transmitter and sensor board fails.	Loop output = 22.8mA
OVER RANGE	Rate exceeds number of digits that can be displayed. Adjust units.	Loop output = 4mA

The limited warranty set forth below is given by Seametrics, with respect to Seametrics AG3000 product purchased in the United States of America and applies to the irrigation market only.

Seametrics warrants that products manufactured by Seametrics, when delivered to you in new condition in their original containers and properly installed, shall be free from defects in material and workmanship. **Seametrics AG3000 is warranted against defects for a period of five (5) years from date of shipment.**

Seametrics' obligation under this warranty shall be limited to replacing or repairing the part or parts, or, at Seametrics' option, the products, which prove defective in material or workmanship. The following are the terms of Seametrics' limited warranty:

a. Buyer must give Seametrics prompt notice of any defect or failure and satisfactory proof thereof.
b. Any defective part or parts must be returned to Seametrics' factory or to an authorized service center for inspection.
c. Buyer will prepay all freight charges to return any products to Seametrics' factory, or another repair facility. as designated by Seametrics.
d. Defective products, or parts thereof, which are returned to Seametrics and proved to be defective upon inspection, will be repaired to factory specifications.
e. Seametrics will deliver repaired products or replacements for defective products to the buyer (ground freight prepaid) to the destination provided in the original order.
f. Products returned to Seametrics for which Seametrics provides replacement under this warranty shall become the property of Seametrics.
g. This limited warranty covers all defects encountered in normal use of Seametrics products, and does not apply to the following cases:
    i. Loss of or damage to Seametrics product due to abuse, mishandling, or improper packaging by buyer
    ii. Failure to follow operating, maintenance, or environmental instructions prescribed in Seametrics' instruction manual
    iii. Products not used for their intended purpose
    iv. Alterations to the product, purposeful or accidental
    v. Electrical current fluctuations
    vi. Corrosion due to aggressive materials not approved for your specific product
    vii. Mishandling, or misapplication of Seametrics products
    viii. Products or parts that are typically consumed during normal operation
    ix. Use of parts or supplies (other than those sold by Seametrics) which cause damage to the products, or cause abnormally frequent service calls or service problems
h. A new warranty period will be established for repaired products, or products replaced during the original warranty period.
i. In the event that equipment is altered or repaired by the buyer without prior written approval by Seametrics, all warranties are void. Damage caused by equipment or accessories not manufactured by Seametrics may void the product's warranty.
j. SOFTWARE: The Seller grants the user a non-exclusive license to use Seametrics' software, according to the following limitations and conditions:
    i. The user may install the software on one or more desktop or laptop computers.
    ii. All title and intellectual rights to the software are owned by Seametrics.
    iii. No copies may be made or distributed except as described above.
    iv. The user may not modify or reverse-engineer the software.

THE FOREGOING WARRANTY IS IN LIEU OF ALL OTHER WARRANTIES, WHETHER ORAL, WRITTEN, EXPRESSED, IMPLIED OR STATUTORY. NO IMPLIED WARRANTY, INCLUDING ANY IMPLIED WARRANTY OF MERCHANTABILITY OR FITNESS FOR A PARTICULAR PURPOSE, APPLIED TO THE PRODUCTS AFTER THE APPLICABLE PERIOD OF THE EXPRESS LIMITED WARRANTY STATED ABOVE, AND NO OTHER EXPRESS WARRANTY OR GUARANTY, EXCEPT AS MENTIONED ABOVE, GIVEN BY ANY PERSON OR ENTITY WITH RESPECT TO THE PRODUCTS, SHALL BIND SEAMETRICS. SEAMETRICS SHALL NOT BE LIABLE FOR LOSS OF REVENUES, OR PROFITS, OR INCONVENIENCES, EXPENSE FOR SUBSTITUTE EQUIPMENT OR SERVICE, STORAGE CHARGES, LOSS OF DATA, OR ANY OTHER SPECIAL, INCIDENTAL, OR CONSEQUENTIAL DAMAGE CAUSED BY THE USE OR MISUSE OF, OR INABILITY TO USE THE PRODUCTS, REGARDLESS OF THE LEGAL THEORY ON WHICH THE CLAIM IS BASED, AND EVEN IF SEAMETRICS HAS BEEN ADVISED OF THE POSSIBILITY OF SUCH DAMAGES. IN NO EVENT SHALL RECOVERY OF ANY KIND AGAINST SEAMETRICS BE GREATER IN AMOUNT THAN THE PURCHASE PRICE OF THE PRODUCT SOLD BY SEAMETRICS AND CAUSING THE ALLEGED DAMAGE. WITHOUT LIMITING THE FOREGOING, YOU ASSUME ALL RISK OF LIABILITY FOR LOSS, DAMAGE, OR INJURY TO YOU AND YOUR PROPERTY AND TO OTHERS AND THEIR PROPERTY ARISING OUT OF USE OR MISUSE OF, OR INABILITY TO USE THE PRODUCTS NOT CAUSED DIRECTLY BY THE NEGLIGENCE OF SEAMETRICS.

SOME STATES DO NOT ALLOW LIMITATIONS ON THE DURATION OF AN IMPLIED WARRANTY, SO THE ABOVE LIMITATIONS MAY NOT APPLY TO YOU. SIMILARLY, SOME STATES DO NOT ALLOW THE EXCLUSION OR LIMITATIONS OF CONSEQUENTIAL DAMAGE, SO THE ABOVE LIMITATION OR EXCLUSION MAY NOT APPLY TO YOU. THIS LIMITED WARRANTY GIVES YOU SPECIFIC LEGAL RIGHTS; HOWEVER, YOU MAY ALSO HAVE OTHER RIGHTS WHICH MAY VARY FROM STATE TO STATE.

Seametrics • 19026 72nd Avenue South • Kent, Washington 98032 • USA
(P) 253.872.0284 • (F) 253.872.0285 • 1.800.975.8153 • seametrics.com

LT-14259r7.5 20190729
7/29/2019